Video Disc Player 22VP600 - 22VP700

00/15/50/65

≡ (VLP700

Service
Service
Service

LaserVision

FOR SERVICE MANUALS
CONTACT:
MAURITRON TECHNICAL SERVICES
www.mauritron.co.uk
TEL: 01844 - 351694
FAX: 01844 - 352554

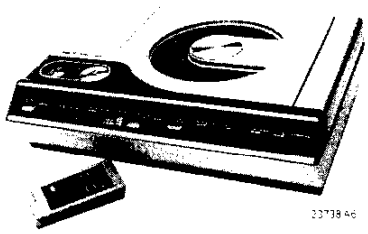

Safety regulations require that the set be restored to its original condition and that parts which are identical with those specified be used.

PART I

Service Manual

PART I

CONTENTS:

Technical data
Block diagram player
Block diagram signal section
Optical path
Wiring diagram
Circuit diagram signal path
Video-Servo panel : Printed board
Mode control module : Circuit diagram
Printed board
Supply-and turntable-motor servo : Circuit diagram
Printed board
Switch- and LED-panel : Circuit diagram
(see circuit diagram signal path)
Printed board
Survey of supply voltages in the player
Location of components in the player
Electrical service adjustments
Optical adjustments
Mechanical adjustments
Exploded view : Cabinet
Chassis
Printed boards assembly
Slide
Lid-releasing
Lubrication instructions
Remote control transmitter (R.C.-T.) : Exploded view
Circuit diagram
Wiring diagram
Remote control receiver (R.C.-R.) : Circuit diagram
Printed board
Connections of semiconductors
Survey of symbols
Abbreviations in the diagrams
Video disc
List of mechanical parts
List of electrical parts

Copyright Video Service - VLP N.V. Philips' Gloeilampenfabrieken Eindhoven

DocumentationTechnique Service Dokumentation Documentazione di Servizio Huolte-Ohje Manual de Servicio Manual de Serviçio

PHILIPS

GB

Subject to modification
4822 726 13212
Printed in The Netherlands

PHILIPS

T

BLOCK DIAGRAM PLAYER

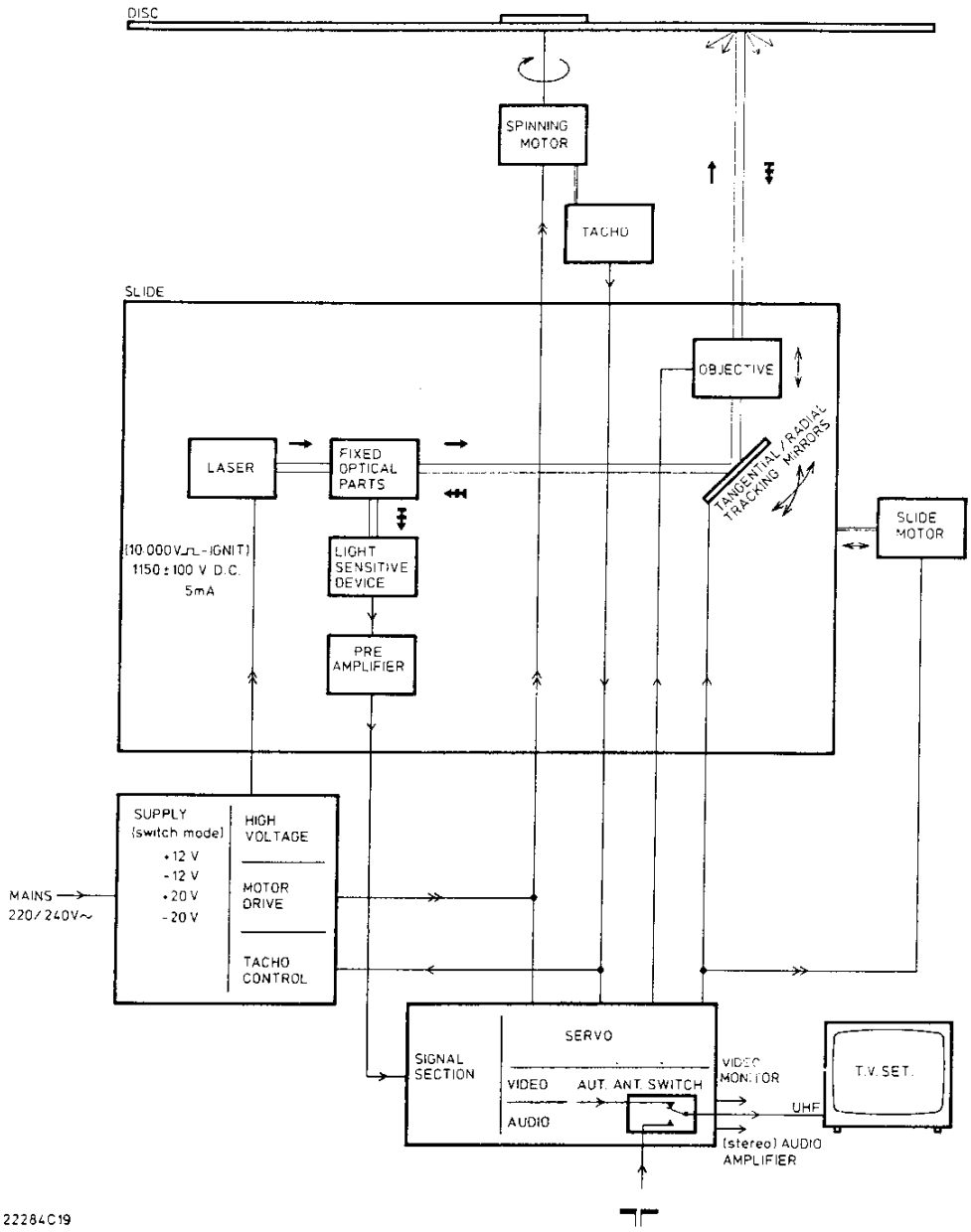

OPTIC

BLOCK
SIGNAI

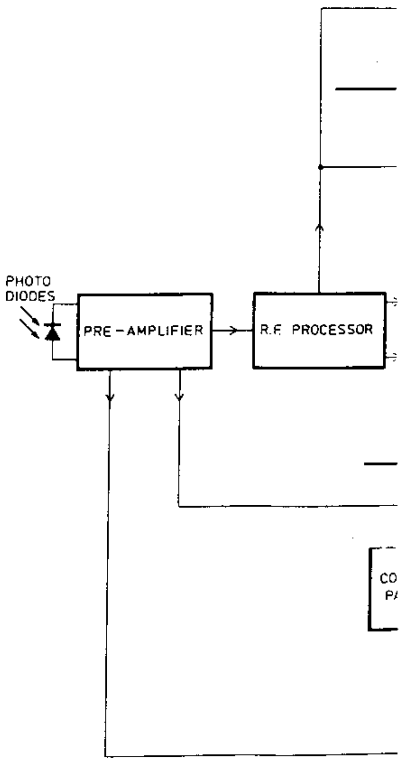

OPTICAL PATH

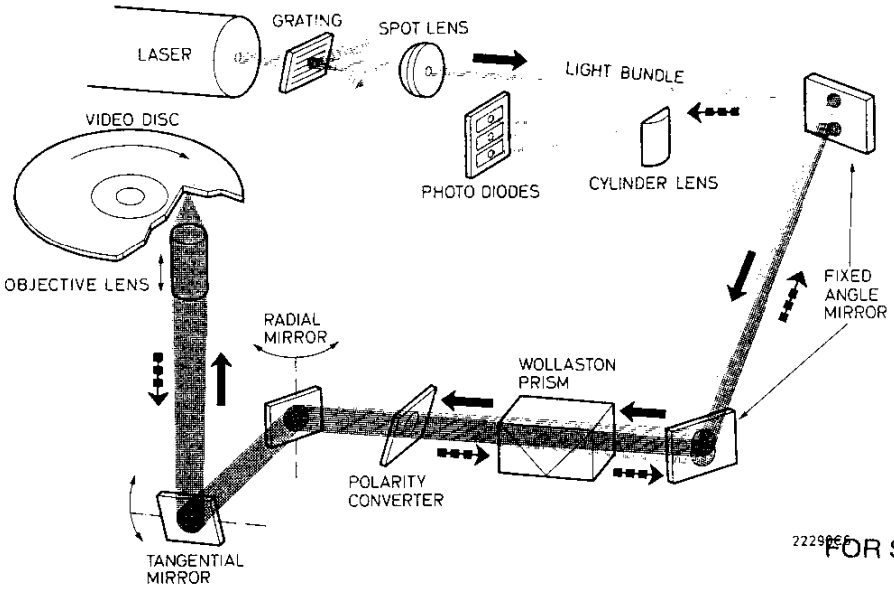

22298C6 FOR SERVICE MANUALS
CONTACT:
MAURITRON TECHNICAL SERVICES
www.mauritron.co.uk
TEL: 01844 - 351694
FAX: 01844 - 352554

BLOCK DIAGRAM SIGNAL SECTION

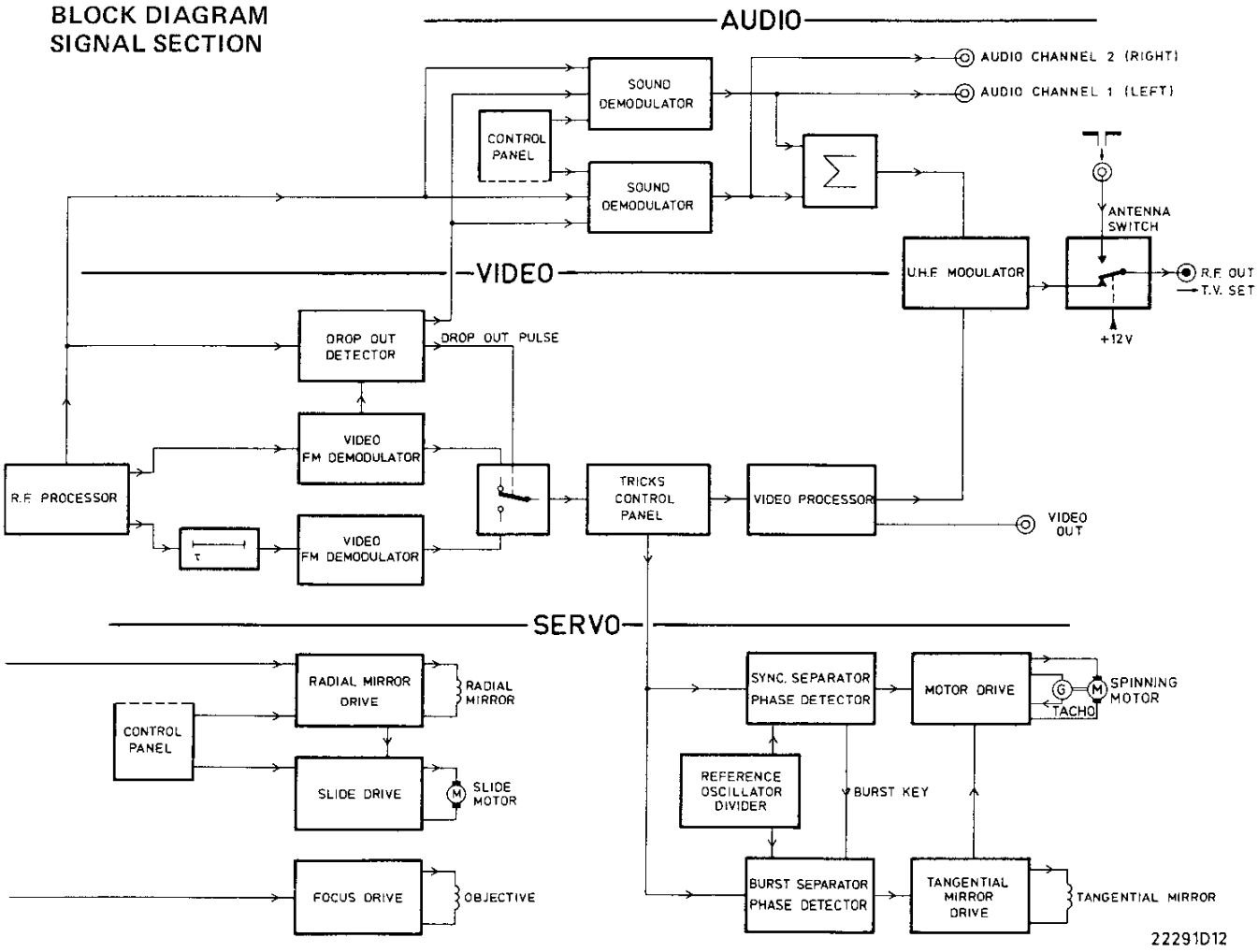

T

TECHNICAL DATA

Player

Mains voltage /00/50 /15/65	: 220 V ± 10 % 240 V ± 10 % (by soldering on trafo)
Mains frequency	: 50 Hz
Power consumption	: 50 Watt (max.)
Fuses	: Temp. fuse in transformer 2x3.15 A delayed
Mainscord	: 2.5 m
Coax cable	: 3.5 m
Dimensions	: 562 x 408 x 152 mm
Weight	: 14 kg.
Operation position	: Horizontal, max. 10° inclined
Ambient temperature	: 5 °C...40 °C working 15 °C...35 °C acc.spec.
T.V. system /00/50 /15/65	: PAL GH : PAL I
Intercarrier distance /00/50 /15/65	: 5.5 MHz : 6 MHz
UHF channel	: 31 ... 43 adjustable 37 factory adjusted
RF input (coax switch)	: B & L female connector
RF output (coax switch)	: B & L male connector 2.5 mV rms across 75 Ω during sync.
Video output	: BNC connector 1 Vpp ± 10 % across 75 Ω positive video signal DC of sync. level: +2.7 V
Frequency range	: 5 MHz (–6 dB)
Signal-noise ratio	: > 37 dB unweighted
Amplitude ratio picture/sound carrier during sync. level	: 10 ... 15 dB
Carrier to noise ratio of the main carrier of the disc.	: 60 dB
Colour subcarrier frequency	: 4433619 Hz ± 50 Hz
Audio outputs (2) (only during play forward mode)	: Dual cinch 1 Vrms max. Ri = 1500 Ω
Frequency range	: 40 Hz ... 20 kHz
Signal-noise ratio	: ⩾ 60 dB weighted
Channel cross talk	: ⩽ –55 dB (1 kHz - 100 % mod.)
Distortion	: < 2 % (1 kHz - 100 % mod.)
Muting during other mode functions than play forward	: > 60 dB
Subcarriers	: audio 1 683 kHz audio 2 1066 kHz
Optical reading system	: Optical path mounted on a slide
Light source	: He-Ne Laser 1.5 ± 0.5 mW 632.8 nm
Objective	: 20 x 0.40 N.A.
Slide drive	: DC motor with gearbox
Turntable motor speed	: C.A.V.: 1500 r.p.m. C.L.V.: 1500...565 r.p.m.
Direction of reading	: From innerside 110 mm to outerside 290 mm max.
Spindle diameter	: Conical for 35 mm disc hole
Thickness of disc	: 2.7 ± 0.2 mm
Appearance of stable picture on T.V. set after start	: < 12 sec. (disc depending)
Time base instability	: < 10 nsec. (except during search)
Disc systems	: C.A.V. (constant angular velocity) C.L.V. (constant linear velocity)
Playing time (max.)	: C.A.V.: 36 min. per side C.L.V.: 54 min. per side

Features: (See also user's manual)
Mainsswitch for stand-by, LED-indication for power-on and C.A.V. modes of operation.
Built-in antenna switch controlled by power supply.
Automatic start after lid closure
Automatic return to start position after lid opening, or end of program

Controls: Play ▷ , *) Play ◁
*) Still picture one by one ▷◁
*) Slow motion ▷◁ (ratio 1:100 adjustable)
*) Fast ▷
**) Search ▷◁
Audio channel I, II (left, right or stereo)
Index display

C.A.V.:	1 x push	: Picture number 5 digits
	2 x push	: Chapter number 2 digits
	3 x push	: Index muted
C.L.V.:	1 x push	: Playing time code-indication 3 digits
	2 x push	: Chapter 2 digits
	3 x push	: Index muted

Remote Control transmitter (R.C.-T.)

Radiation system	: Infra Red
Modulation frequency	: 170 kHz
Dimensions	: 153 x 77 x 30 mm
Weight	: 150 g
Battery	: 9 V type 6 F 22HD

Controls: Play ▷ , *) Play ◁
*) Still ▷◁
Search ▷◁
*) Fast ▷
*) Slow ▷
Index

*) Not possible with C.L.V.; no reaction of mode switches.
**) Colour not always present with search.

Remarks:
- Built-in transport-screw has to be used.
- After lid opening a mechanical and electrical safety system automatically starts.

Warning:
Be careful with respect to the laserbeam and the high voltage.

PHILIPS PYE 22VP600 - 22VP700

00/15/50/65

Service
Service
Service

LaserVision

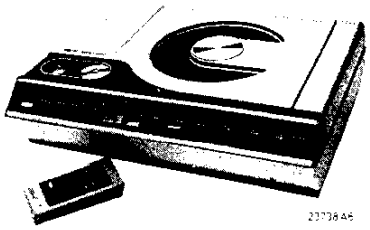

Safety regulations require that the set be restored to its original condition and that parts which are identical with those specified be used.

Service Manual

22VP600 and **22VP700** are Video Disc Players suitable for playback of pre-recorded optical video discs, according Laser Vision (L.V.)-system.

22VP600=	Standard version
22VP700=	22VP600 with Remote Control (R.C.) transmitter and receiver

/00 and **/50**	versions are suitable for PAL G/H – 220 V~
/15 and **/65**	versions are suitable for PAL I – 240 V~

Part I	Service Manual	4822 726 13212
Part Ia	Circuit Units	4822 726 13215
Part II	Repair method	4822 726 13213
Part III	Descriptions	4822 726 13214

FOR SERVICE MANUALS
CONTACT:
MAURITRON TECHNICAL SERVICES
www.mauritron.co.uk
TEL: 01844 - 351694
FAX: 01844 - 352554

Copyright Video Service-VLP N.V.Philips' Gloeilampenfabrieken Eindhoven

DocumentationTechnique Service Dokumentation Documentazione di Servizio Huolte-Ohje Manual de Servicio Manual de Servicio

Subject to modification
GB 4822 726 13192
Printed in The Netherlands

CS 80 330

T

WIRING DIAGRAM

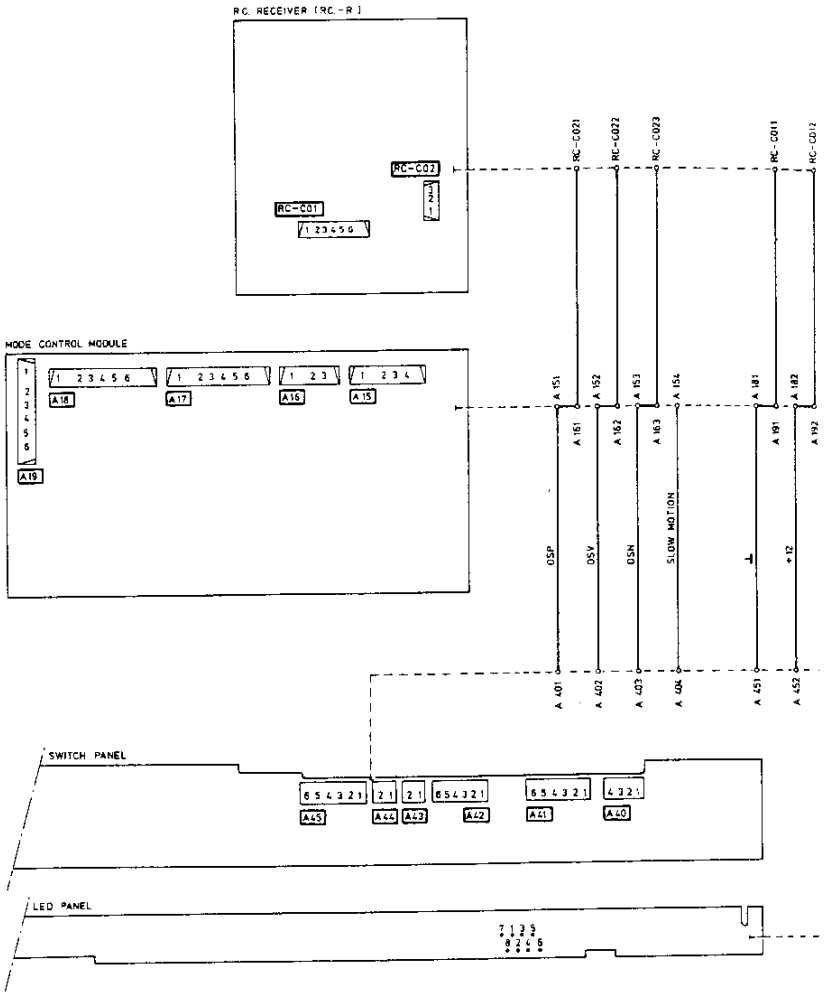

FOR SERVICE MANUALS
CONTACT:
MAURITRON TECHNICAL SERVICES
www.mauritron.co.uk
TEL: 01844 - 351694
FAX: 01844 - 352554

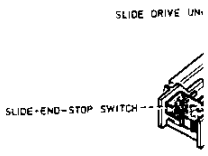

DIAGRAM

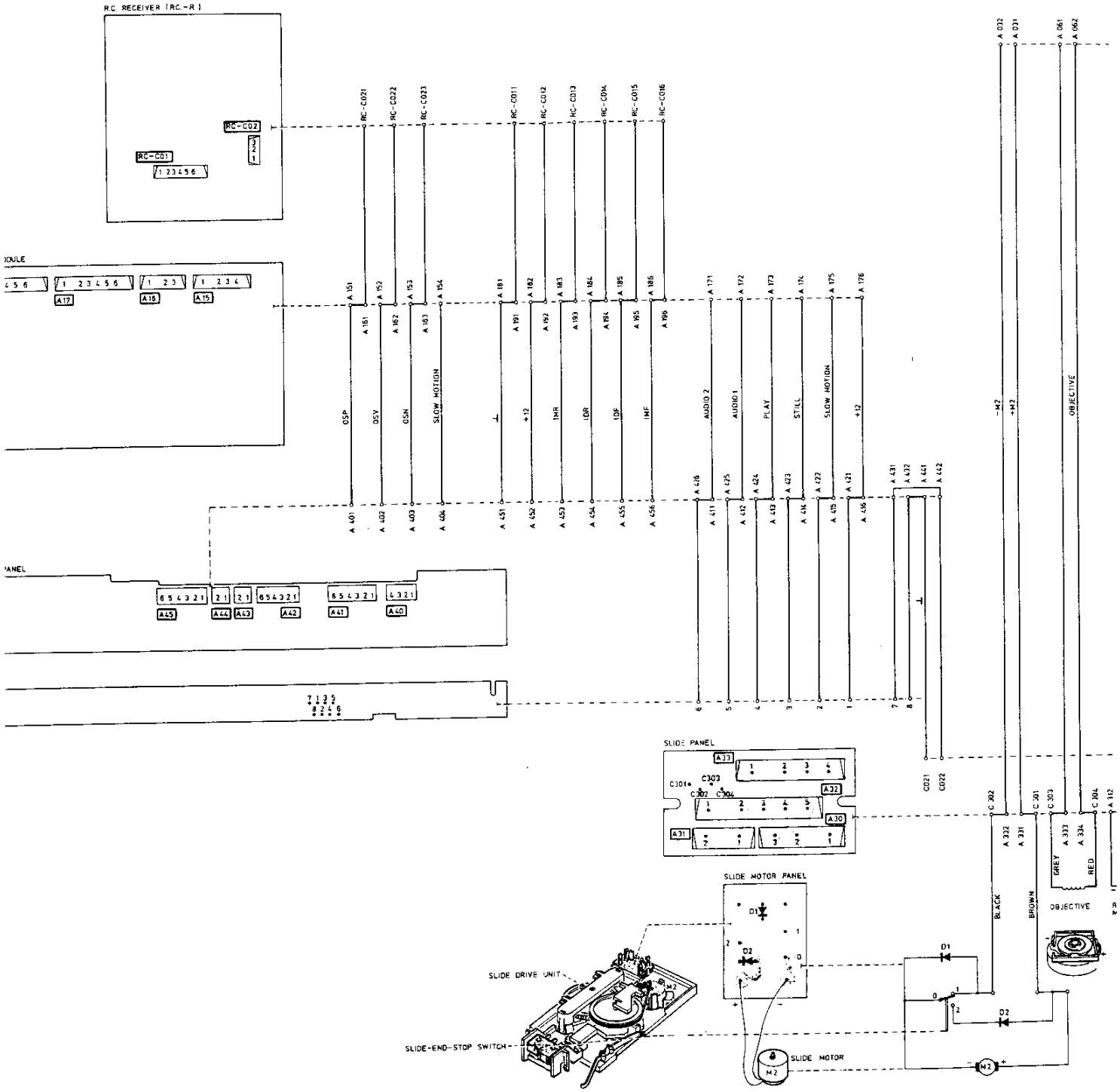
R.C. RECEIVER (RC-R)
RC-C02
RC-C01
RC-C021
RC-C022
RC-C023
RC-C011
RC-C012
RC-C013
RC-C014
RC-C015
RC-C016
A 151
A 152
A 153
A 154
A 181
A 182
A 183
A 184
A 185
A 186
A 171
A 172
A 173
A 174
A 175
A 176
A 161
A 162
A 163
A 191
A 192
A 193
A 194
A 195
A 196
OSP
OSV
OSN
SLOW MOTION
+12
IMR
IDR
IDF
IMF
AUDIO 2
AUDIO 1
PLAY
STILL
SLOW MOTION
+12
A 401
A 402
A 403
A 404
A 451
A 452
A 453
A 454
A 455
A 456
A 411
A 412
A 413
A 414
A 415
A 416
A 421
A 422
A 423
A 424
A 425
A 426
A 431
A 432
A 441
A 442
A 032
A 031
A 061
A 062
-M2
+M2
OBJECTIVE
A17
A16
A15
A45
A44
A43
A42
A41
A40
SLIDE PANEL
A33
A32
A30
A31
C301
C302
C303
C304
C021
C022
A 332
A 331
A 333
A 334
A 312
GREY
RED
BLACK
BROWN
OBJECTIVE
SLIDE MOTOR PANEL
D1
D2
SLIDE DRIVE UNIT
SLIDE-END-STOP SWITCH
SLIDE MOTOR
M2

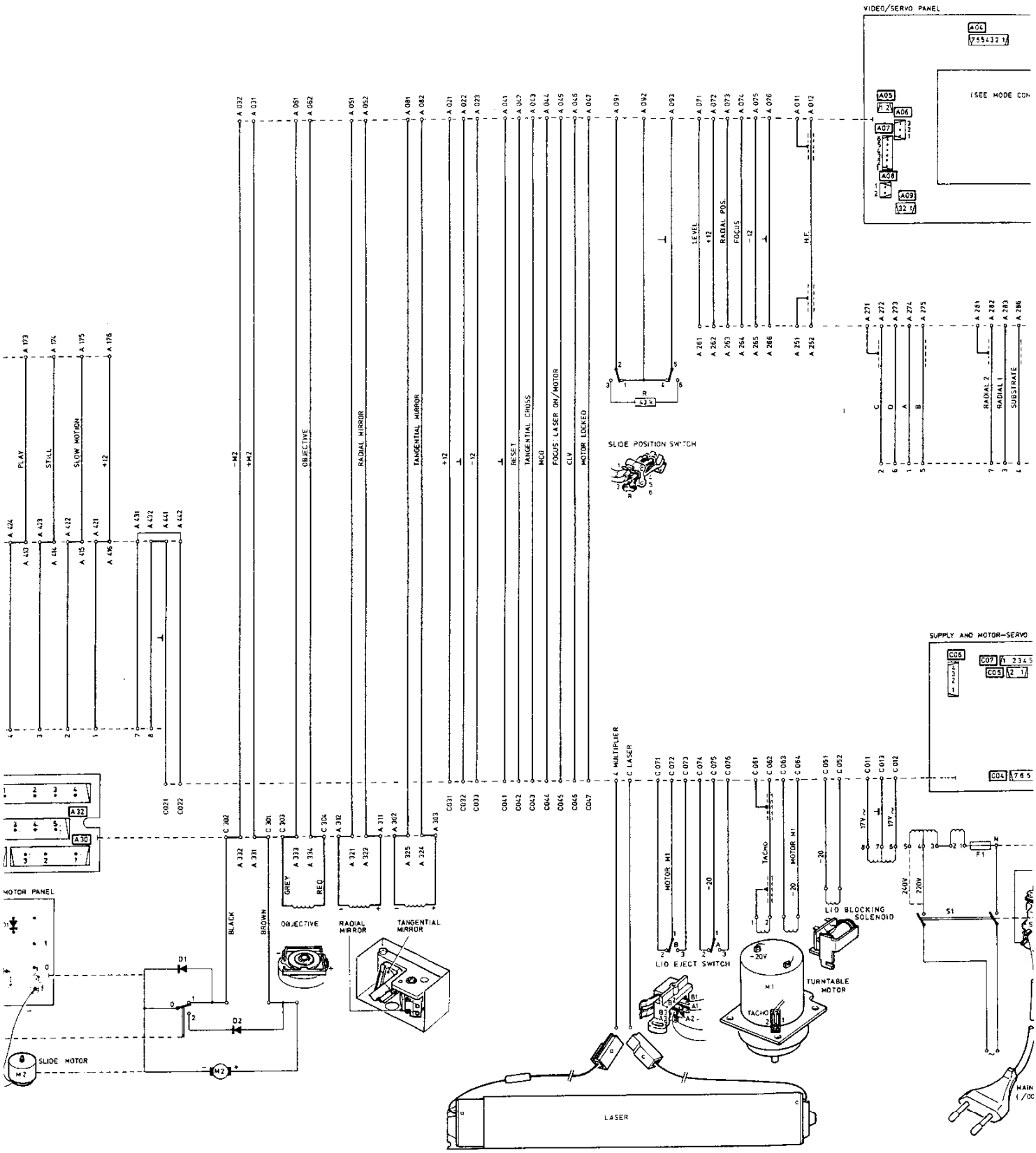

FOR SERVICE MANUALS
CONTACT:
MAURITRON TECHNICAL SERVICES
www.mauritron.co.uk
TEL: 01844 - 351694
FAX: 01844 - 352554

T

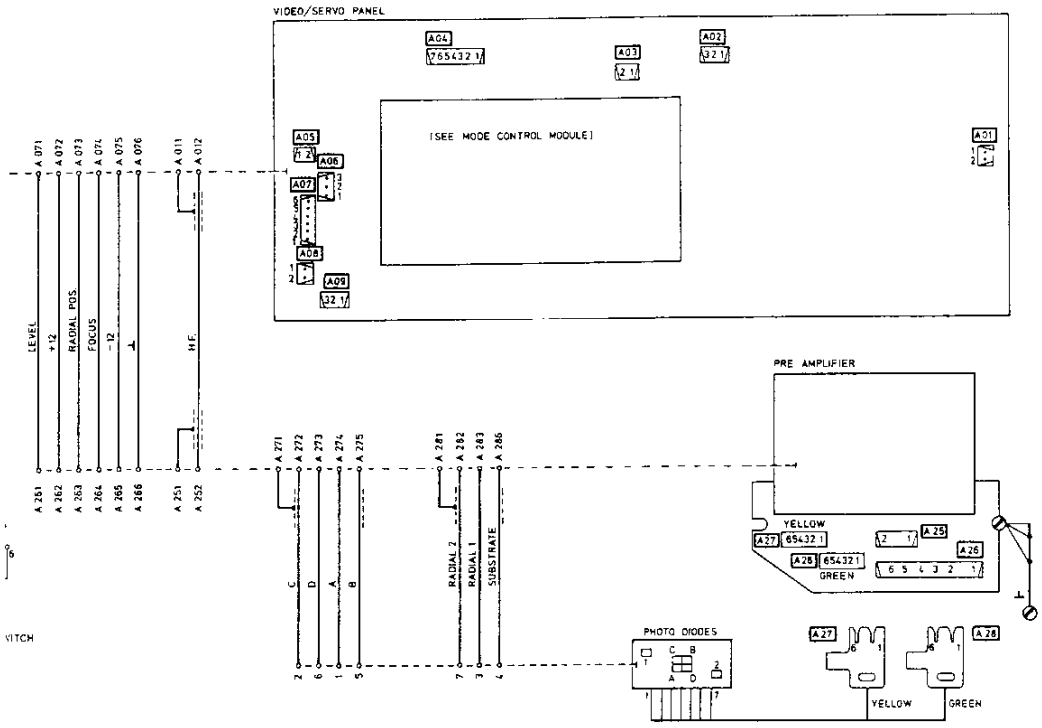

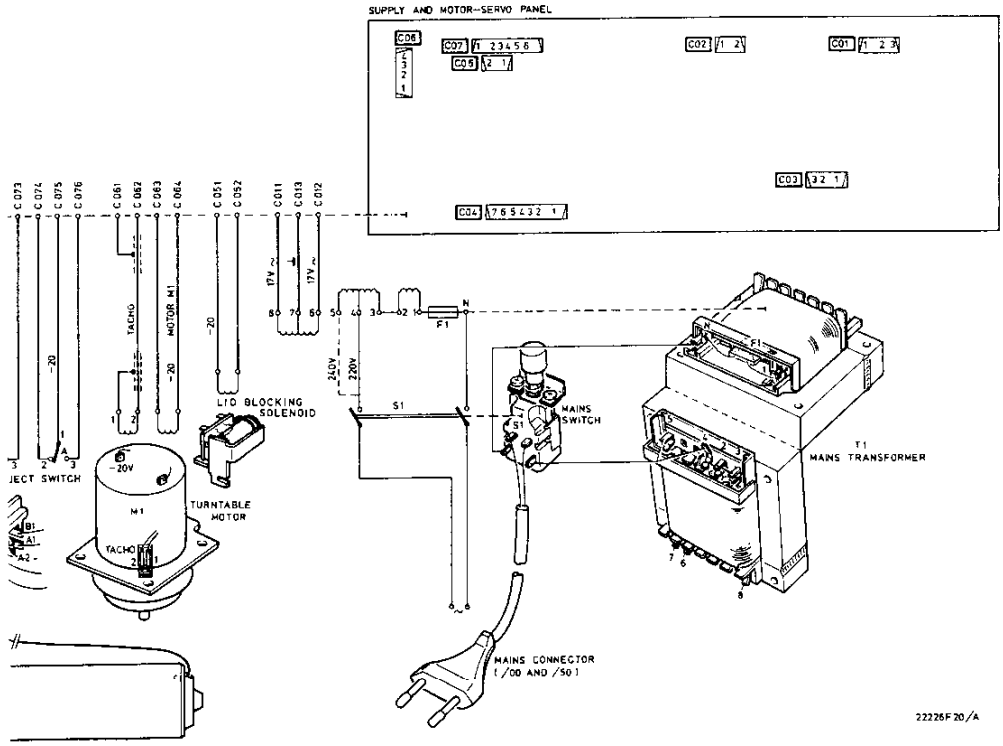

FOR SERVICE MANUALS
CONTACT:
MAURITRON TECHNICAL SERVICES
www.mauritron.co.uk
TEL: 01844 - 351694
FAX: 01844 - 352554

CIRCUIT DIAGRAM SIGNAL PATH

Remark:
Voltages between brackets are measured during the start up procedure

FOR SERVICE MANUALS
CONTACT:
MAURITRON TECHNICAL SERVICES
www.mauritron.co.uk
TEL: 01844 - 351694
FAX: 01844 - 352554

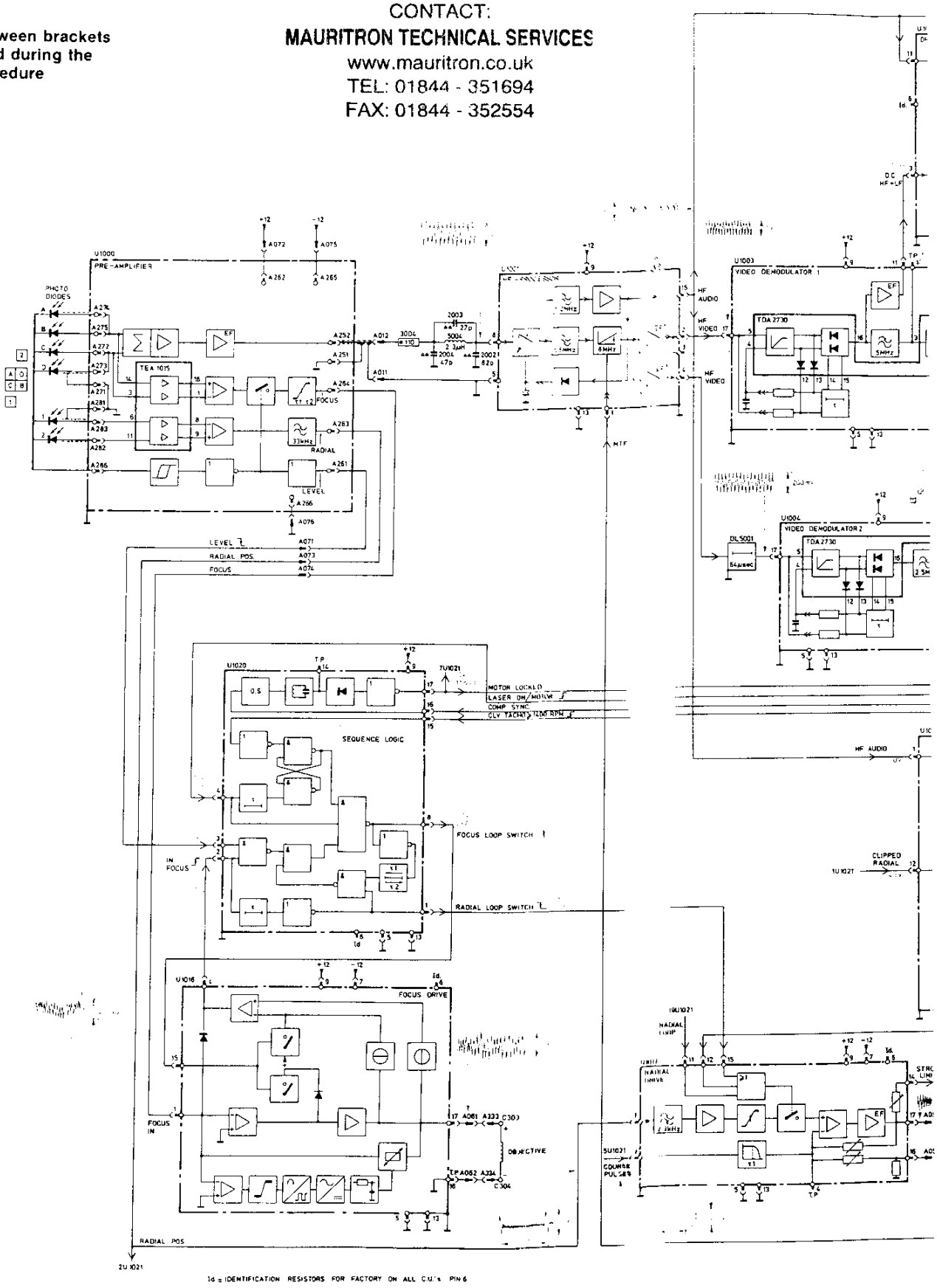

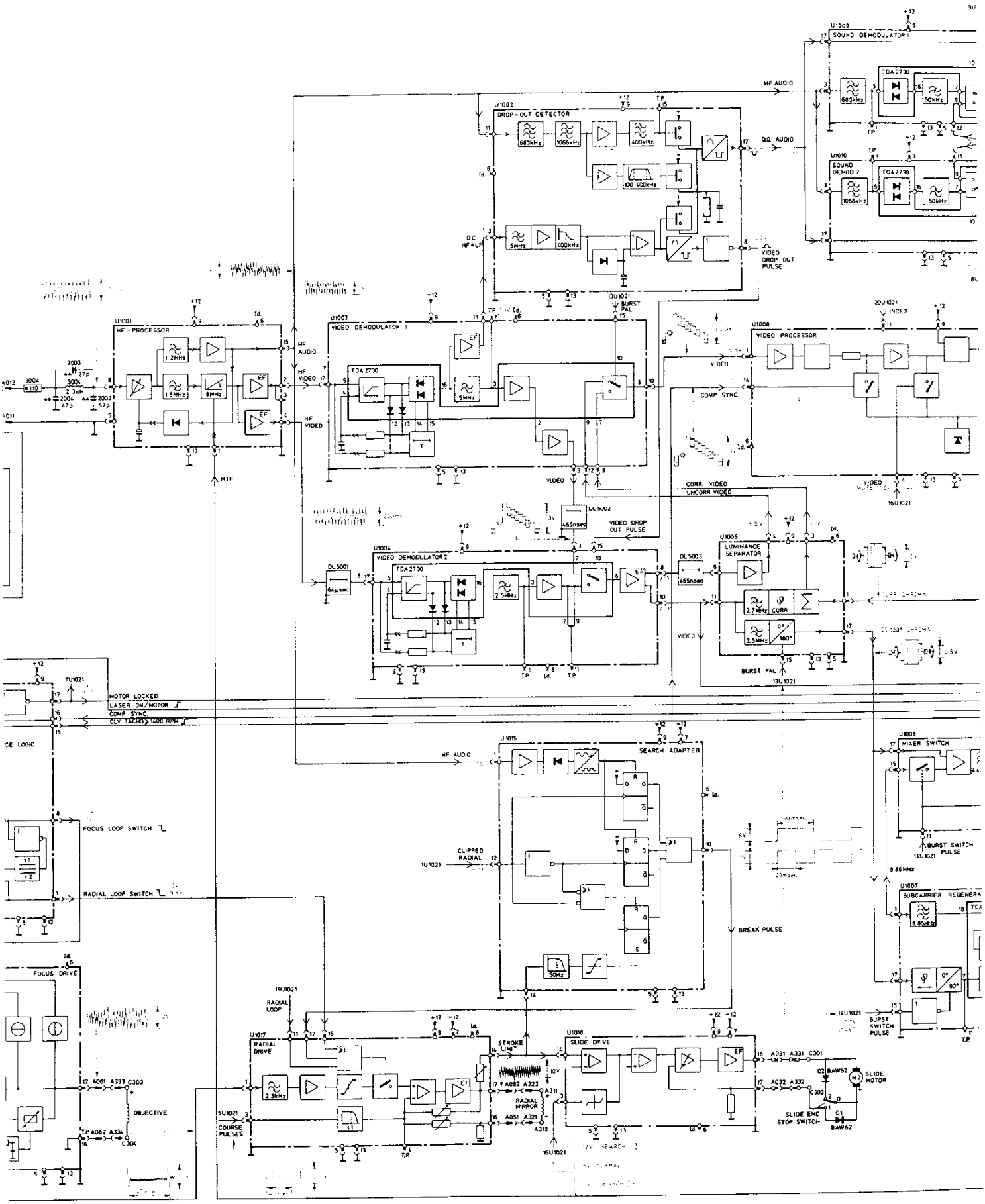

TORY ON ALL C.U.'s PIN 6

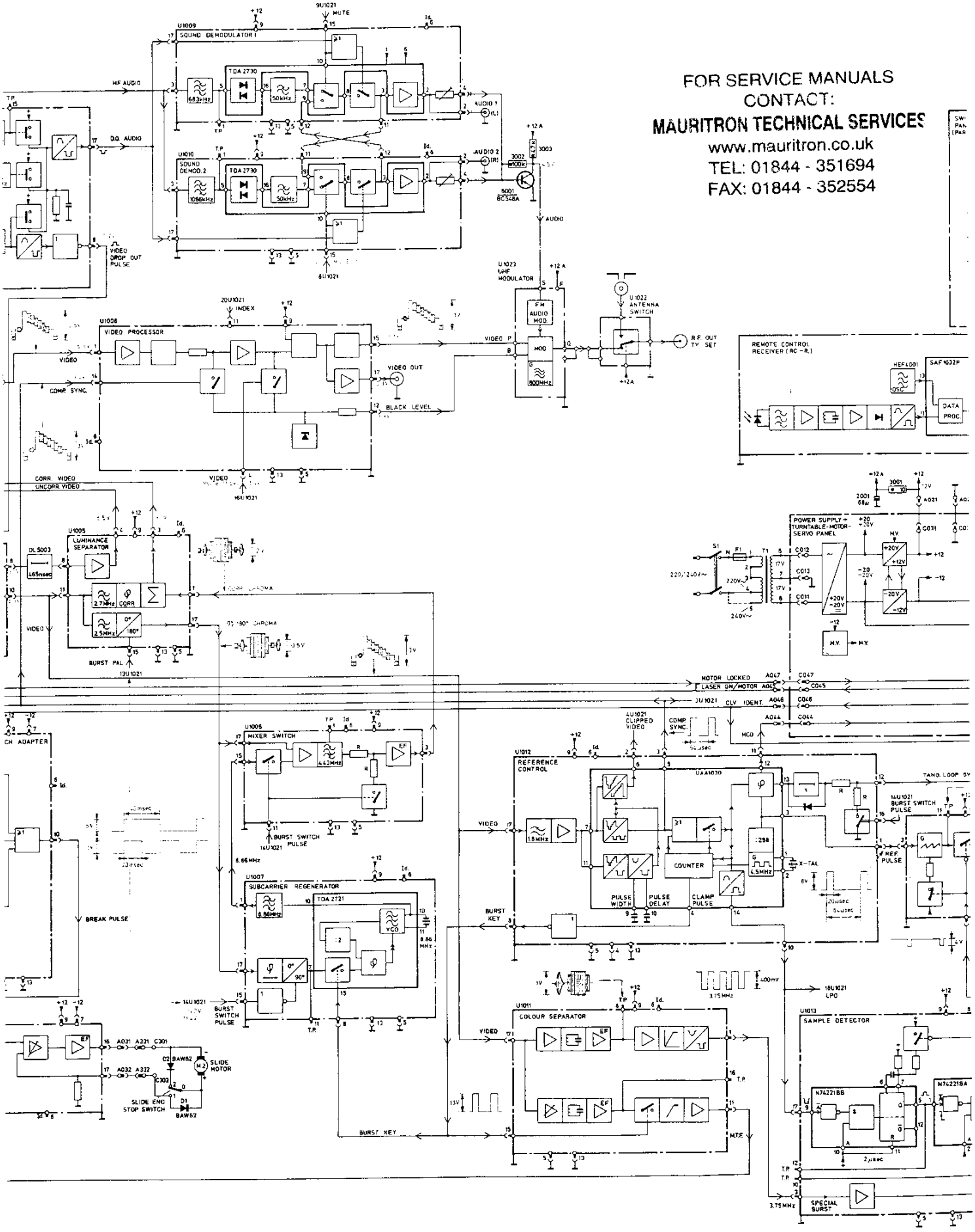

FOR SERVICE MANUALS
CONTACT:
MAURITRON TECHNICAL SERVICES
www.mauritron.co.uk
TEL: 01844 - 351694
FAX: 01844 - 352554

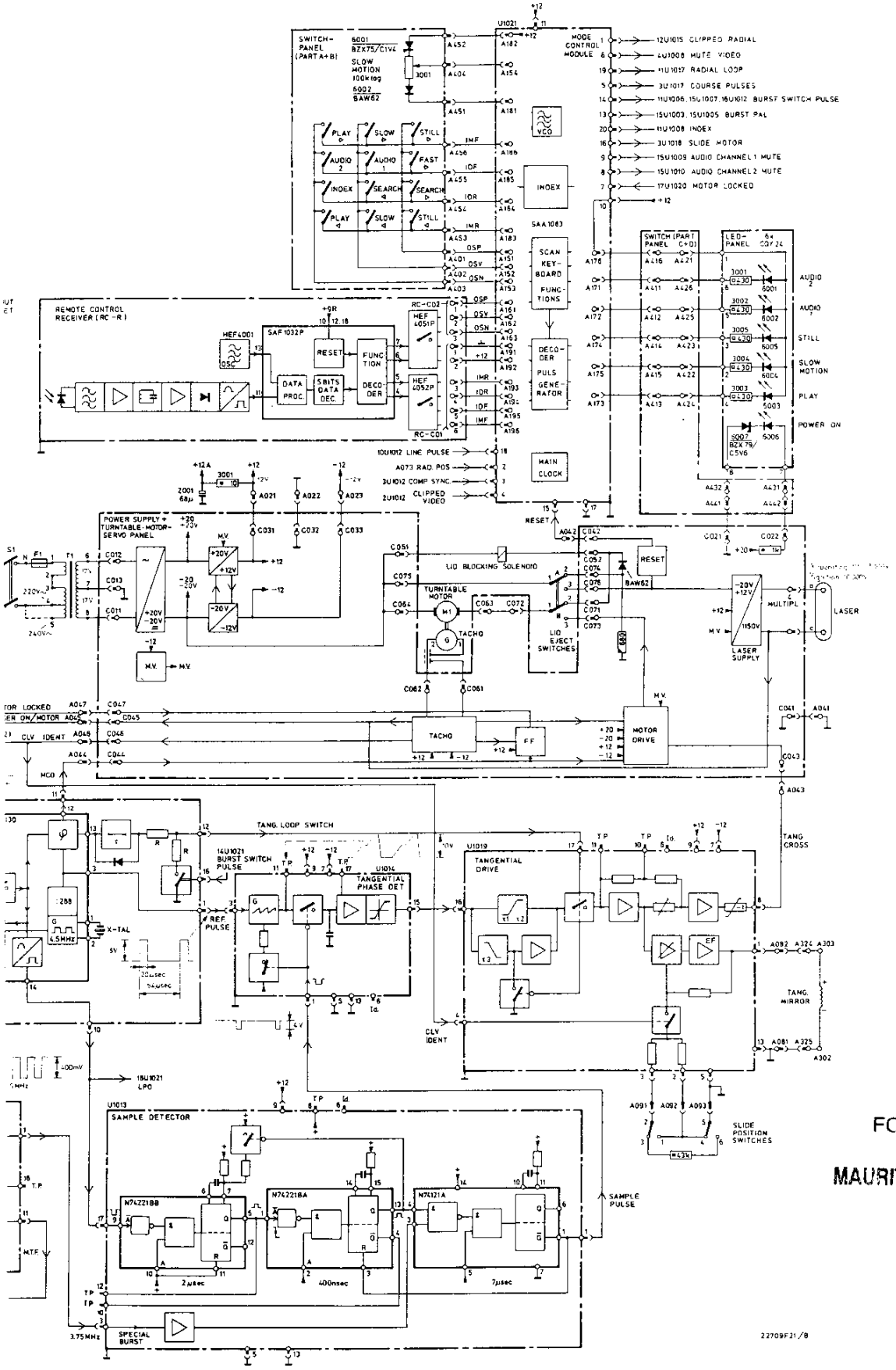

FOR SERVICE MANUALS
CONTACT:
MAURITRON TECHNICAL SERVICES
www.mauritron.co.uk
TEL: 01844 - 351694
FAX: 01844 - 352554

C.U.'s and Modules

U1000	Pre-amplifier	4822 212 21058
U1001	H.F.-processor	4822 212 21035
U1002	Drop-out detector	4822 212 21036
U1003	Video demodulator 1	4822 212 21037
U1004	Video demodulator 2	4822 212 21038
U1005	Luminance separator	4822 212 21039
U1006	Mixer switch	4822 212 21041
U1007	Subcarrier regenerator	4822 212 21042
U1008	Video processor	4822 212 21043
U1009	Sound demodulator 1	4822 212 21044
U1010	Sound demodulator 2	4822 212 21045
U1011	Colour separator	4822 212 21046
U1012	Reference control	4822 212 21047
U1013	Sample detector	4822 212 21048
U1014	Tangential phase detector	4822 212 21049
U1015	Search adapter	4822 212 21051
U1016	Focus drive	4822 212 21052
U1017	Radial drive	4822 212 21053
U1018	Slide drive	4822 212 21054
U1019	Tangential drive	4822 212 21055
U1020	Sequence logic	4822 212 21056
U1021	Mode control module	4822 212 21057
U1022	Antenna switch	4822 216 90507
U1023	UHF-Modulator (00/50)	4822 210 20298
U1023	UHF-Modulator (/15/65)	4822 210 20307

VIDEO –SERVO– PRINTED BOARD

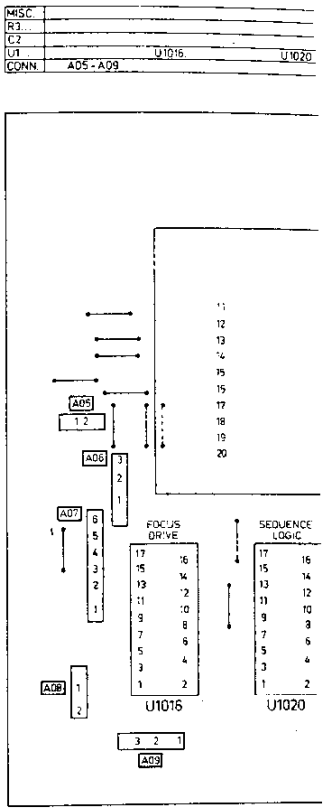

BC548A		4822 130 40948
5001	τ = 64 μsec	4822 218 20193
5002,5003	τ = 465 nsec	4822 157 50887
5004	2.3 μH	4822 157 51185
2001	68 μF - 16 V	4822 124 20689
	27 pF - 2 %	4822 122 30045
	47 pF - 2 %	4822 122 31072
	82 pF - 2 %	4822 122 31243

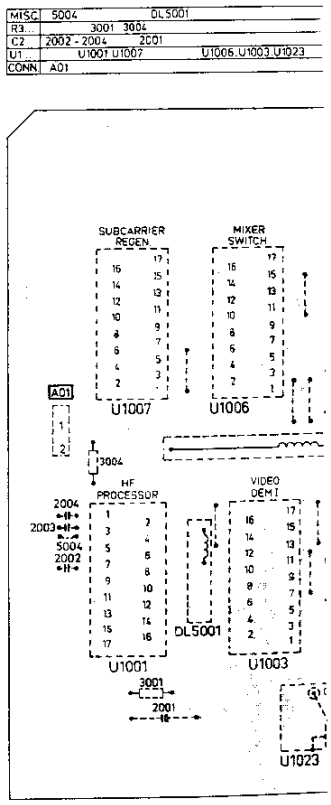

FOR SERVICE MANUALS
CONTACT:
MAURITRON TECHNICAL SERVICES
www.mauritron.co.uk
TEL: 01844 - 351694
FAX: 01844 - 352554

	4822 212 21058
	4822 212 21035
:or	4822 212 21036
ator 1	4822 212 21037
ator 2	4822 212 21038
ırator	4822 212 21039
	4822 212 21041
ıerator	4822 212 21042
-	4822 212 21043
ator 1	4822 212 21044
ator 2	4822 212 21045
r	4822 212 21046
;ol	4822 212 21047
r	4822 212 21048
e	4822 212 21049
	4822 212 21051
	4822 212 21052
	4822 212 21053
	4822 212 21054
;	4822 212 21055
	4822 212 21056
	4822 212 21057
	4822 216 90507
r	4822 210 20298
r	4822 210 20307

	4822 130 40948

ec	4822 218 20193
ec	4822 157 50887

	4822 157 51185

; V	4822 124 20689

' %	4822 122 30045
%	4822 122 31072
%	4822 122 31243

VIDEO --SERVO-- PRINTED BOARD

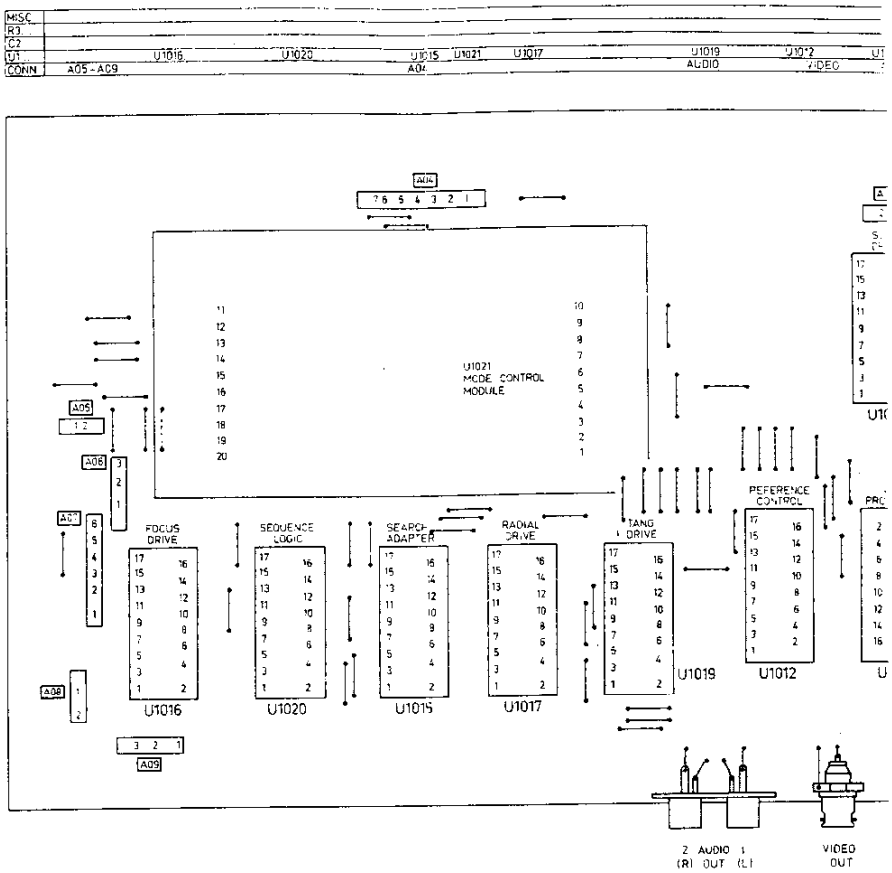

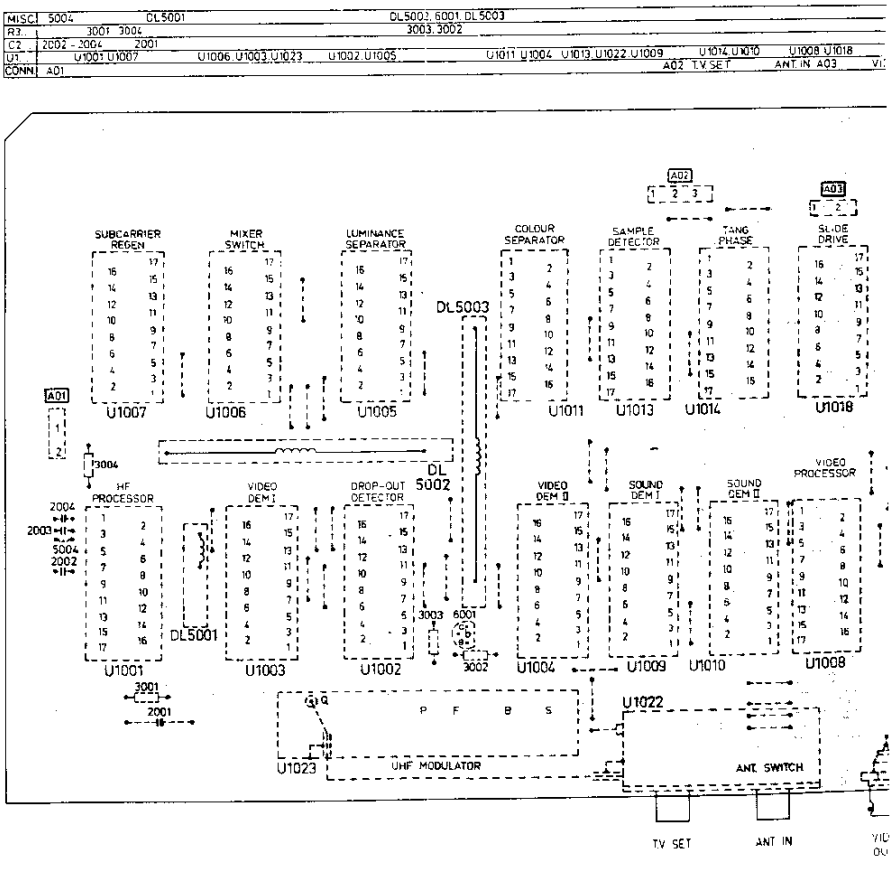

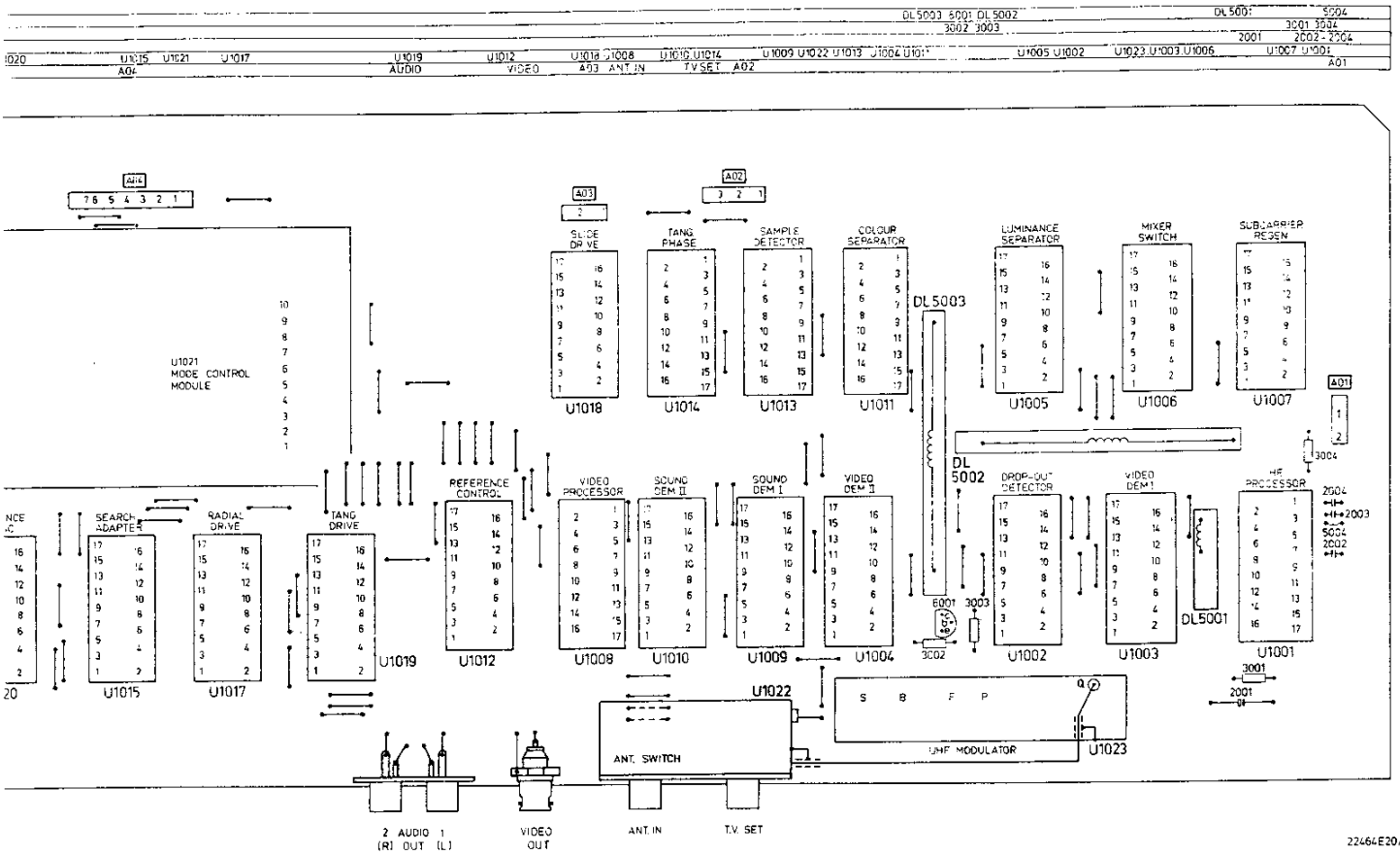
U1021
MODE CONTROL
MODULE
SLIDE DRIVE
TANG PHASE
SAMPLE DETECTOR
COLOUR SEPARATOR
LUMINANCE SEPARATOR
MIXER SWITCH
SUBCARRIER REGEN
DL 5003
DL 5002
DL 5001
SEARCH ADAPTER
RADIAL DRIVE
TANG DRIVE
REFERENCE CONTROL
VIDEO PROCESSOR
SOUND DEM I
SOUND DEM II
VIDEO DEM II
DROP-OUT DETECTOR
VIDEO DEM I
HF PROCESSOR
U1018
U1014
U1013
U1011
U1005
U1006
U1007
U1019
U1012
U1008
U1010
U1009
U1004
U1002
U1003
U1001
U1015
U1017
U1022
U1023
ANT. SWITCH
UHF MODULATOR
2 AUDIO 1
(R) OUT (L)
VIDEO OUT
ANT. IN
T.V. SET
22464E20A

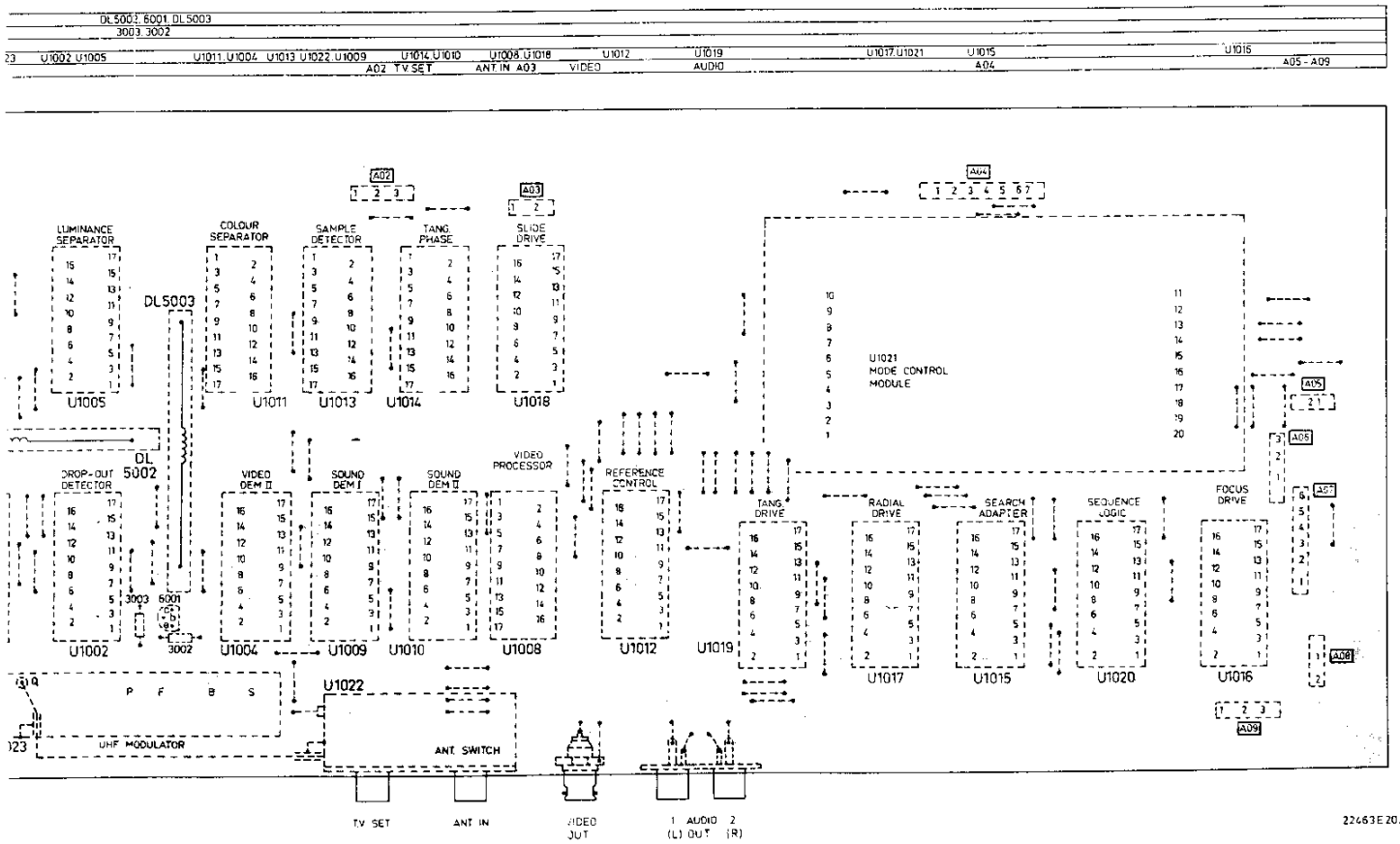
LUMINANCE SEPARATOR
COLOUR SEPARATOR
SAMPLE DETECTOR
TANG. PHASE
SLIDE DRIVE
DL5003
DL 5002
U1021
MODE CONTROL
MODULE
DROP-OUT DETECTOR
VIDEO DEM II
SOUND DEM I
SOUND DEM II
VIDEO PROCESSOR
REFERENCE CONTROL
TANG. DRIVE
RADIAL DRIVE
SEARCH ADAPTER
SEQUENCE LOGIC
FOCUS DRIVE
U1005
U1011
U1013
U1014
U1018
U1002
U1004
U1009
U1010
U1008
U1012
U1019
U1017
U1015
U1020
U1016
U1022
UHF MODULATOR
ANT. SWITCH
T.V. SET
ANT. IN
VIDEO OUT
1 AUDIO 2
(L) OUT (R)
22463E20A

CS 78 305

MODE CONTROL MODULE CIRCUIT DIAGRAM

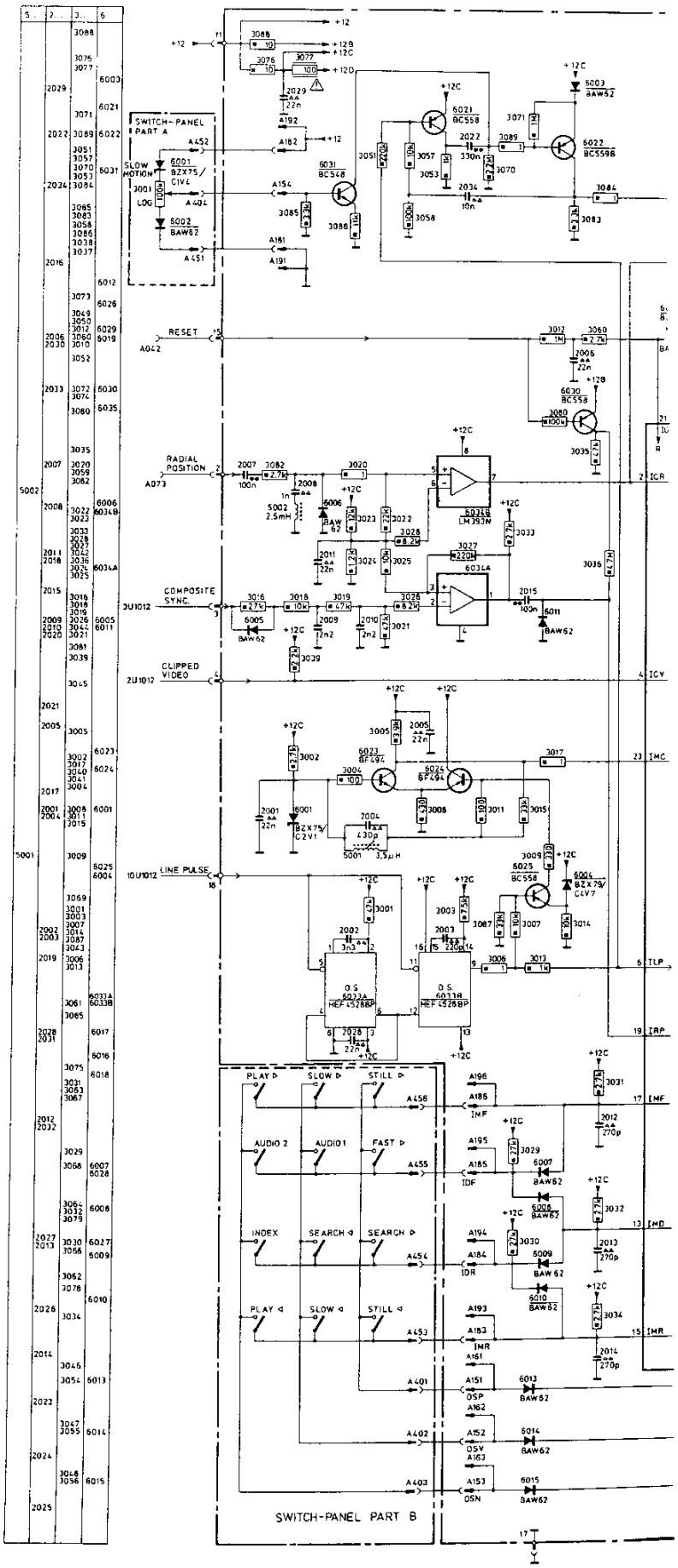

FOR SERVICE MANUALS
CONTACT:

MAURITRON TECHNICAL SERVICES

www.mauritron.co.uk
TEL: 01844 - 351694
FAX: 01844 - 352554

CS 78 306

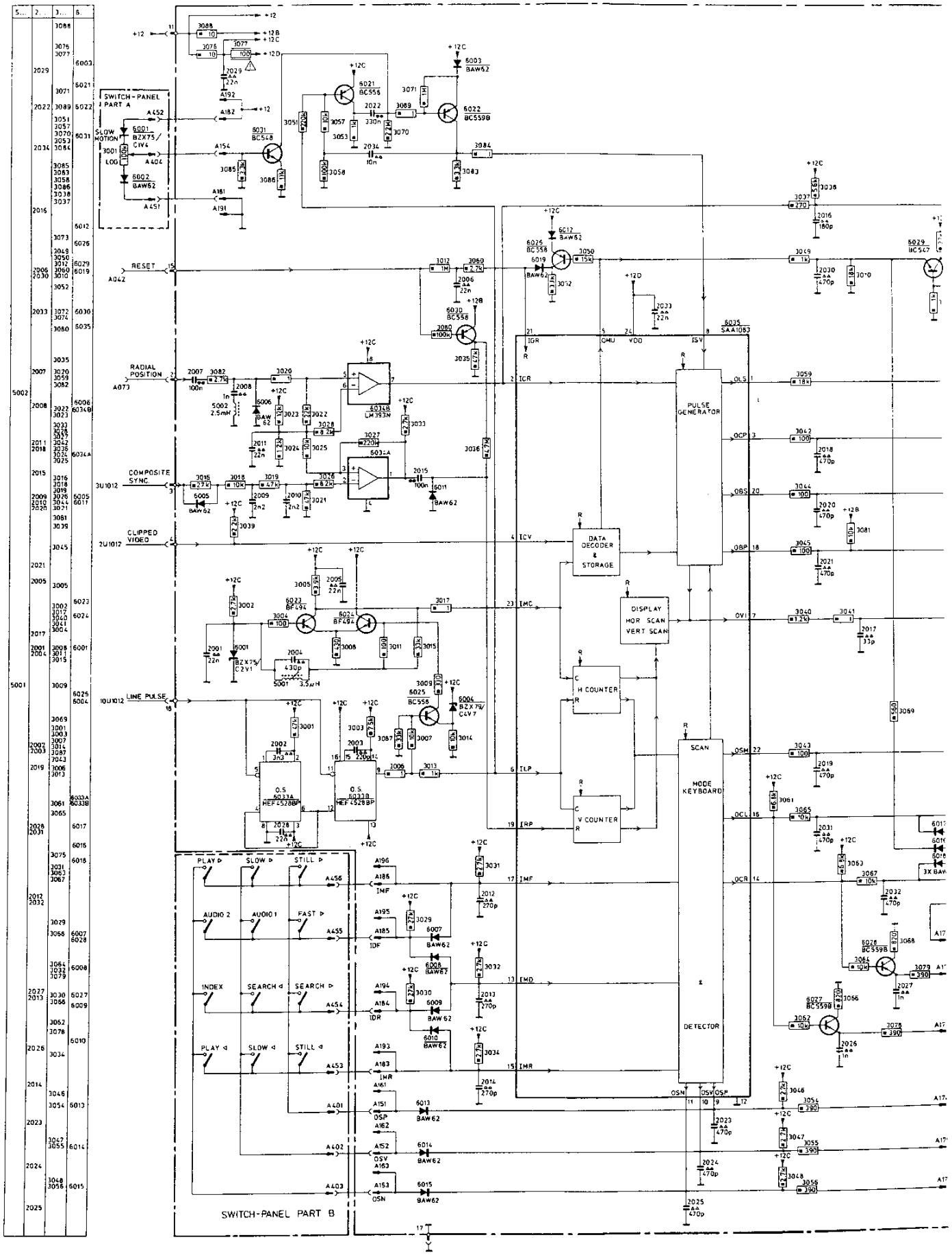
SWITCH-PANEL PART A
SLOW MOTION
LOG
RESET
RADIAL POSITION
COMPOSITE SYNC.
CLIPPED VIDEO
LINE PULSE
PULSE GENERATOR
DATA DECODER & STORAGE
DISPLAY HOR SCAN VERT SCAN
H COUNTER
V COUNTER
SCAN MODE KEYBOARD & DETECTOR
PLAY ▷
SLOW ▷
STILL ▷
AUDIO 2
AUDIO 1
FAST ▷
INDEX
SEARCH ◁
SEARCH ▷
PLAY ◁
SLOW ◁
STILL ◁
SWITCH-PANEL PART B

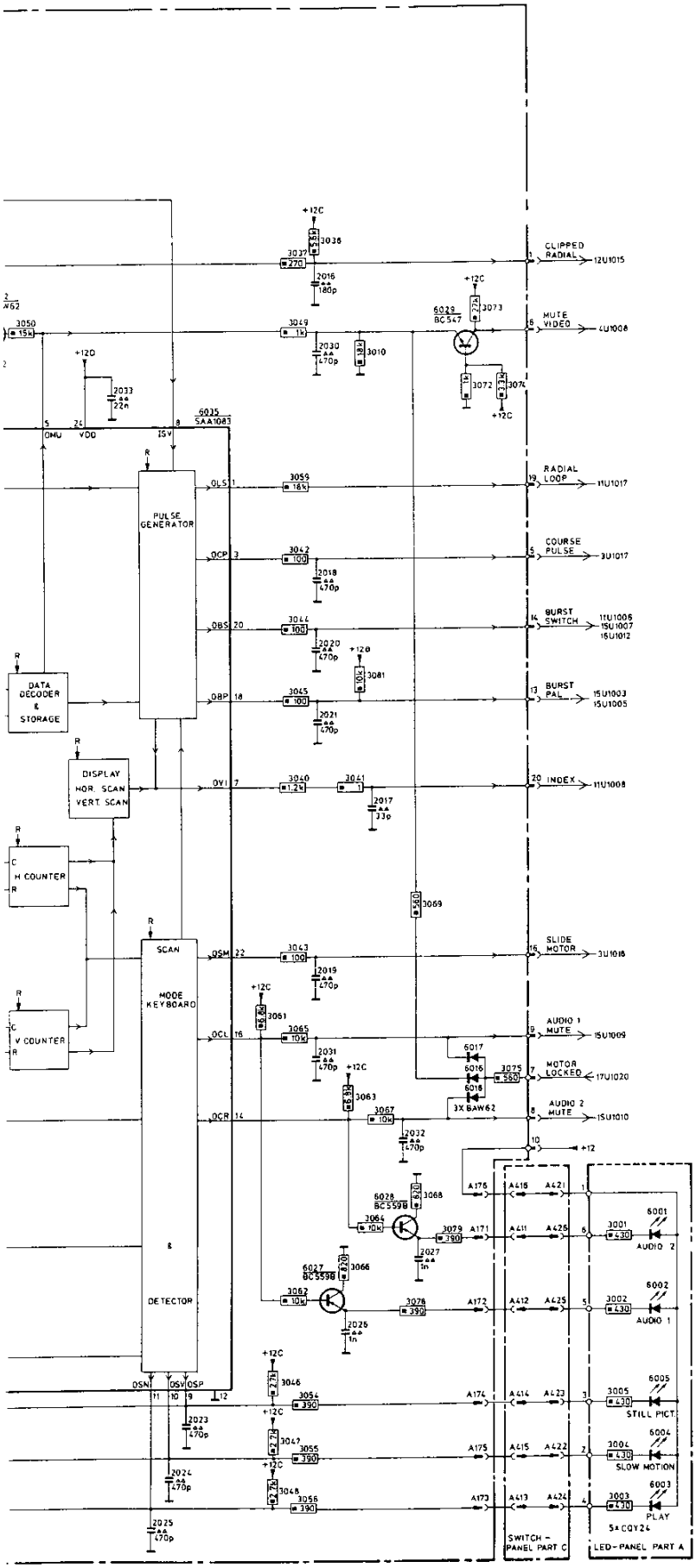

FOR SERVICE MANUALS
CONTACT:
MAURITRON TECHNICAL SERVICES
www.mauritron.co.uk
TEL: 01844 - 351694
FAX: 01844 - 352554

HEF4528BP		5322 209 14191
LM393N		4822 209 80797
SAA1083P		4822 209 80795

BC547		4822 130 44257
BC548		4822 130 40938
BC558		4822 130 40941
BC559		4822 130 40963
BC559B		4822 130 44358
BF494		4822 130 44195

BAW62		4822 130 30613
BZX75/C2V1		4822 130 34049
BZX79/C4V7		4822 130 34174

5001	3.5 μH	4822 156 10518
5002	2.5 mH	4822 158 20377

3077	100 Ω NFR25	4822 111 30535

2004	430 pF	5322 121 54129
2009,2010	2.2 nF - 5% - 63 V	4822 121 50415

	33 pF - 2 %	4822 122 31067
	180 pF - 2 %	4822 122 31352
	220 pF - 2 %	4822 122 31506
	270 pF - 2 %	4822 122 30107
	270 pF - 2 %	4822 122 31168
	470 pF - 2 %	5322 122 34159
	1 nF - 10 %	4822 122 31175
	1 nF −20+80 %	4822 122 30027
	3.3 nF - 10 %	4822 122 30099
	10 nF −20+50 %	5322 122 34041
	22 nF −20+80 %	4822 122 30103

	100 nF - 10 %	4822 121 41161
	330 nF - 10 %	4822 121 40434

FOR SERVICE MANUALS
CONTACT:
MAURITRON TECHNICAL SERVICES
www.mauritron.co.uk
TEL: 01844 - 351694
FAX: 01844 - 352554

FOR SERVICE MANUALS
CONTACT:
MAURITRON TECHNICAL SERVICES
www.mauritron.co.uk
TEL: 01844 - 351694
FAX: 01844 - 352554

MODE CONTROL MODULE PRINTED BOARD

CONN	A19	A18	A17	A16	A15
2	2001 2019 2021 2017 2028 2002 2006 2029 2014	2012 2013 2033 2027 2026 2015	2016 2023 2025 2011 2031 2034	2022 2030 2007 2010 2032 2018	
3	3088 3081 3008 3004	3076 3002 3029 3032 3063 3034 3061 3079 3078	3054 3056 3062 3027 3051 3065 3067 3058 3057 3053 3071	3089 3083 3070 3086 3085	
3	3035 3080	3015 3011 3005 3036 3060 3043 3045 3064 3068 3066	3046 3048 3028 3020 3033 3084	3069 3049 3010	3019 3018 3016 3072 3075
3	3012 3006 3001 3003	3007 3087 3009 3052 3014 3017 3077 3013	3050 3059 3040 3042 3037 3022 3025	3038 3039 3026 3021	3082
5	5001			5002	
6	6001 6033 6023 6030 6024 6025 6007 6010	6004 6012 6026 6019 6028 6011 6035 6027	6034 6013 6015	6003	6021 6022 6016 6006 6029 6018 6017 6005 6031

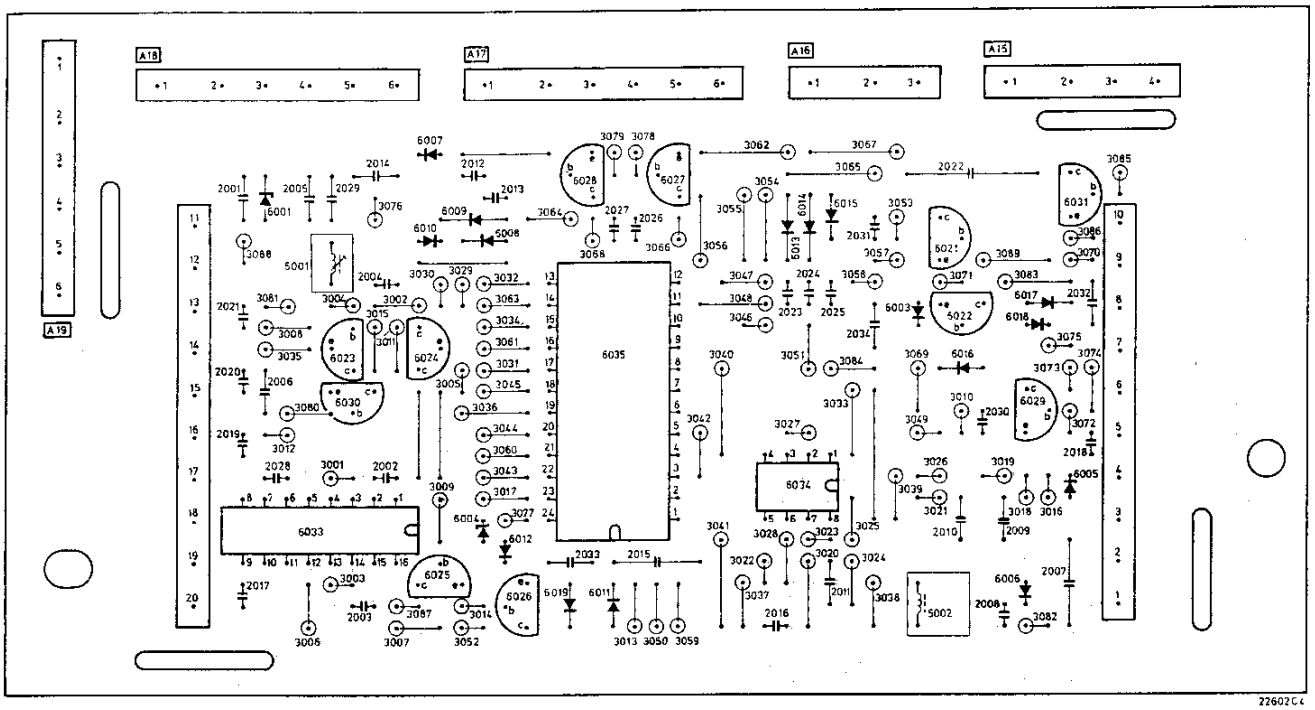

CONN	A15	A16	A17	A18	A19
2	2018 2032 2007 2010 2030 2022	2034 2031 2011 2023 2025 2016	2015 2026 2027 2033 2013 2012	2014 2029 2002 2006 2028 2017 2019 2021 2001	
3	3085 3086 3070 3083 3089	3071 3053 3057 3058 3067 3065 3051 3027 3062 3054 3056	3078 3079 3061 3034 3063 3029 3032 3002 3076	3004 3008 3081 3088	
3	3072 3075 3016 3018 3019	3010 3049 3069 3084 3033 3020 3028 3046 3048	3068 3068 3064 3043 3045 3060 3036 3005 3011 3015	3080 3035	
3	3082	3021 3026 3039 3038 3022 3025 3037 3040 3042	3059 3050 3013 3077 3017 3014 3052 3009 3087 3007	3003 3001 3006 3012	
5	5002			5001	
6	6031 6005 6017 6018 6029 6006 6016 6022 6021	6003 6013 6015 6034	6027 6035 6011 6028 6019 6026 6012 6004 6007 6010	6025 6024 6030 6023 6033 6001	

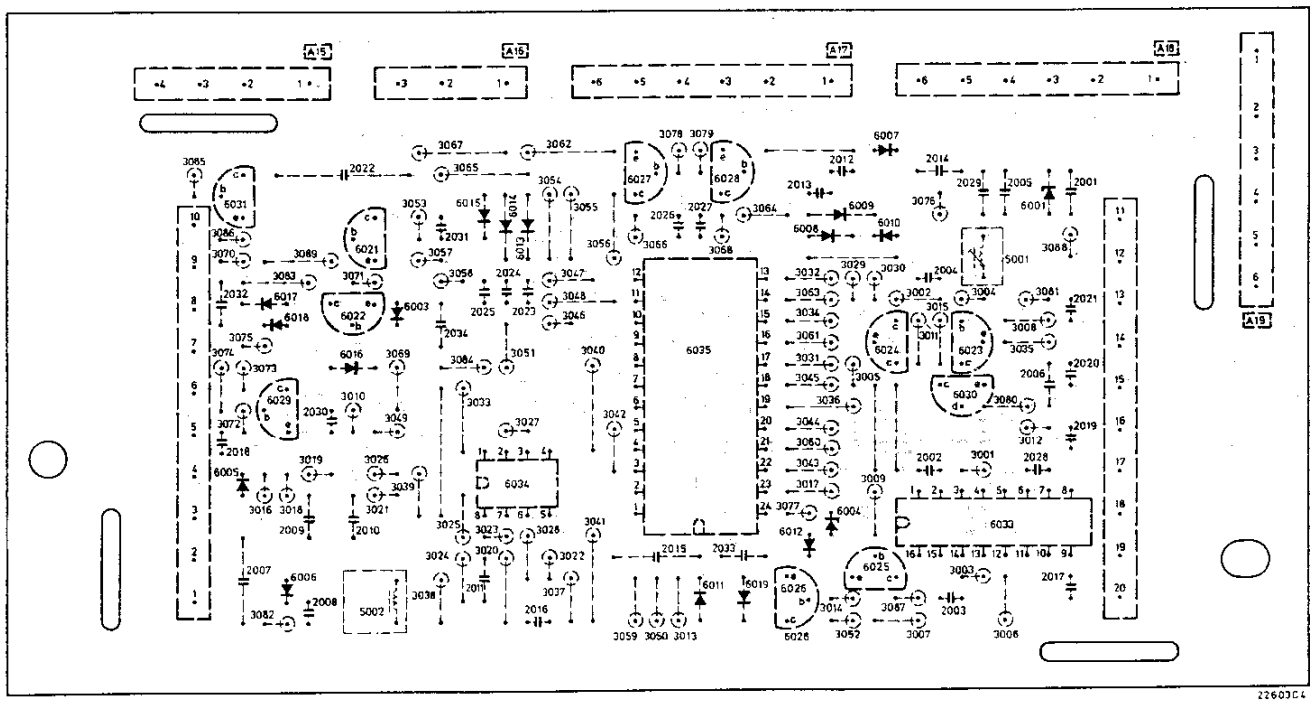

CS 78 307

SUPPLY–AND TURNTABLE–MOTOR–SERVO CIRCUIT DIAGRAM

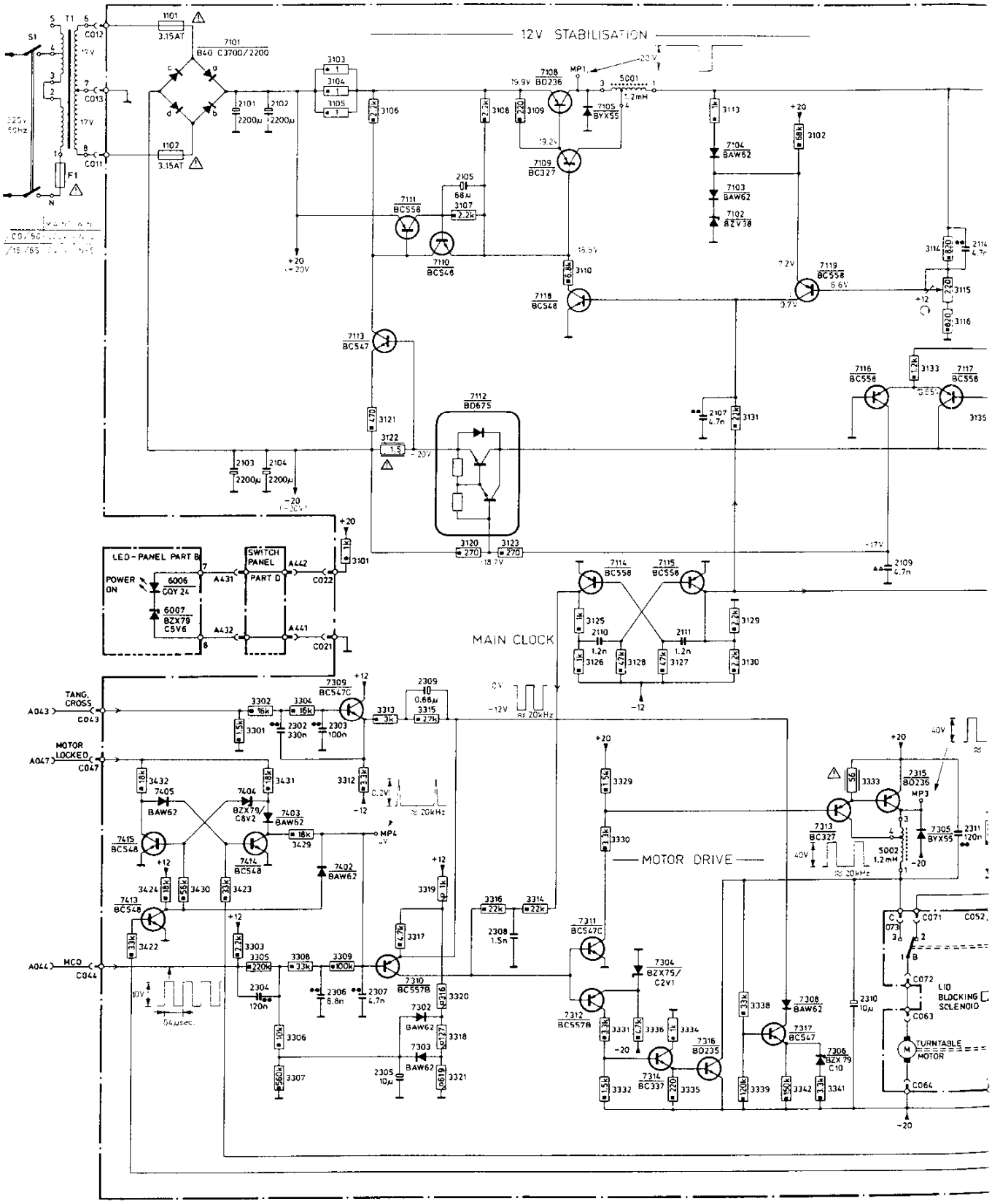

-MOTOR-SERVO

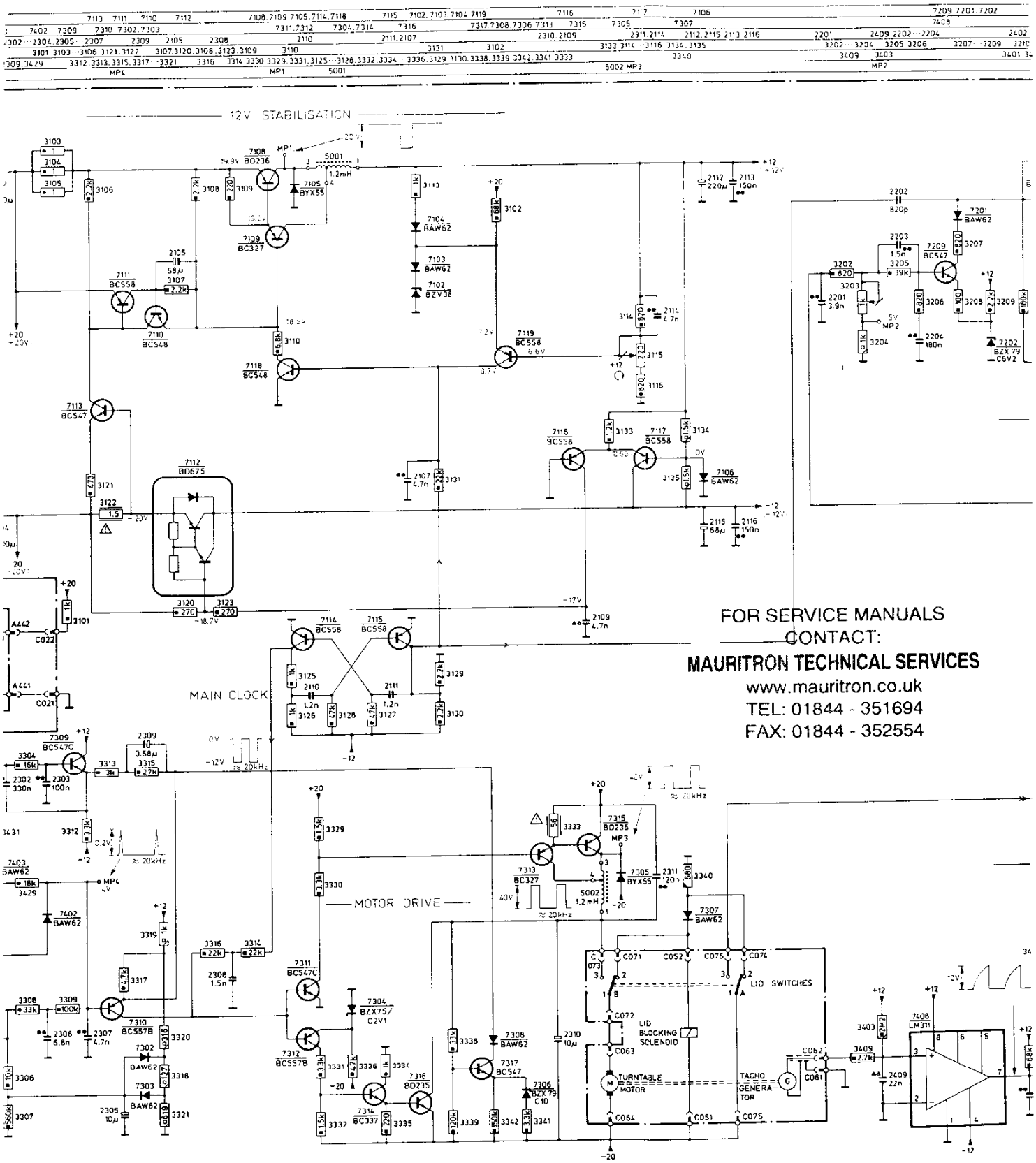
12V STABILISATION
MAIN CLOCK
MOTOR DRIVE
LID SWITCHES
LID BLOCKING SOLENOID
TURNTABLE MOTOR
TACHO GENERATOR
FOR SERVICE MANUALS
CONTACT:
MAURITRON TECHNICAL SERVICES
www.mauritron.co.uk
TEL: 01844 - 351694
FAX: 01844 - 352554

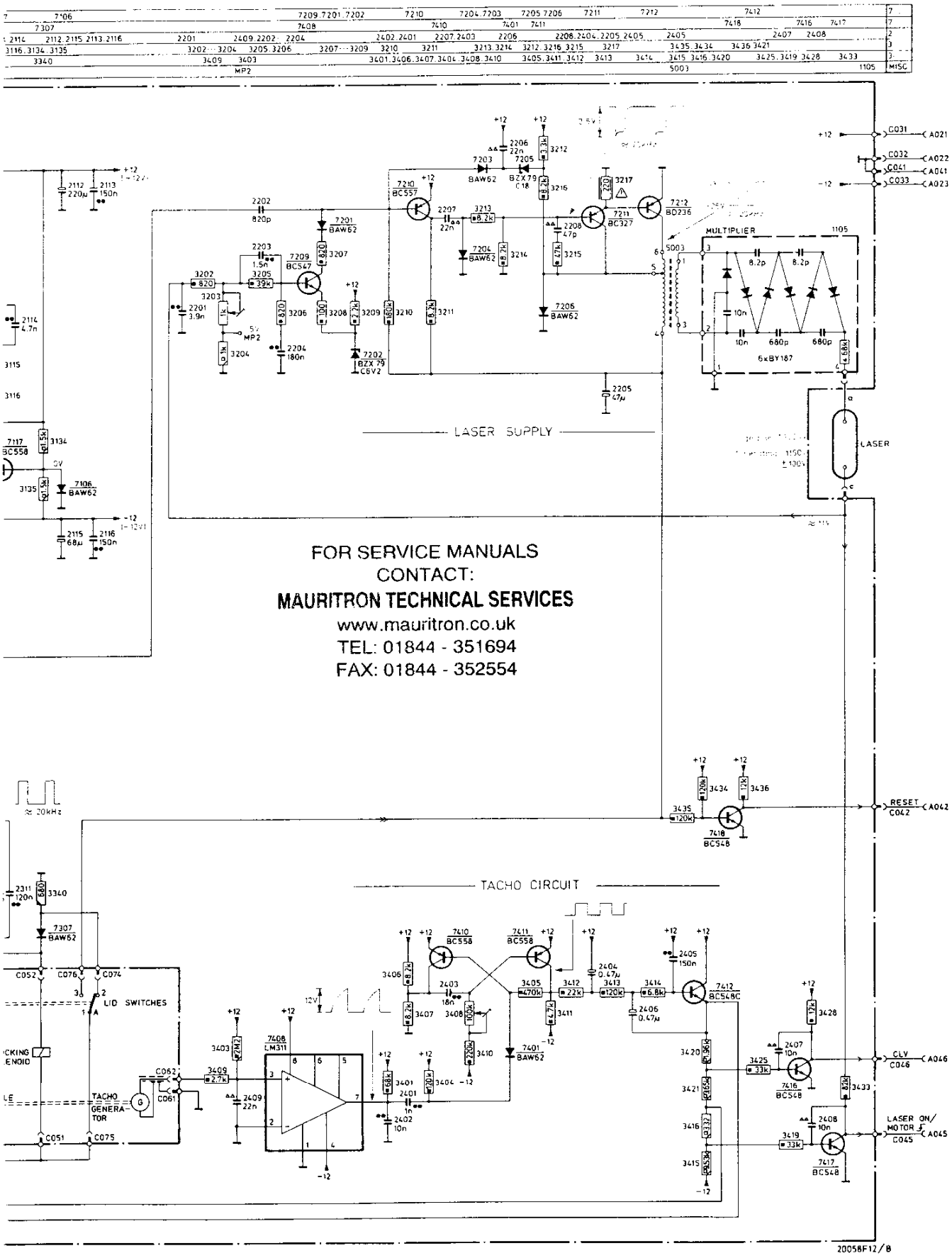

FOR SERVICE MANUALS
CONTACT:
MAURITRON TECHNICAL SERVICES
www.mauritron.co.uk
TEL: 01844 - 351694
FAX: 01844 - 352554

LM311		5322 209 85503
BC327		4822 130 40854
BC337		4822 130 40855
BC547		4822 130 44257
BC547C		4822 130 44503
BC548		4822 130 40938
BC548C		4822 130 44196
BC557		4822 130 44256
BC557B		4822 130 44568
BC558		4822 130 40941
BD235		4822 130 40918
BD236		4822 130 41026
BD675		5322 130 44604
BAW62		4822 130 30613
BYX55/350		4822 130 30817
BZV38		4822 130 30947
BZX75/C2V1		4822 130 34049
BZX79/C6V2		4822 130 34167
BZX79/C8V2		4822 130 34382
BZX79/C10		4822 130 34297
BZX79/C18		4822 130 31024
C2206-B40/C3700		5322 130 34962
1105	Multiplier	4822 214 50231
5001	+12 V	4822 158 20372
5002	Motor drive	4822 158 20371
5003	High tension	4822 142 60318
1101,1102	3.15 AT	4822 253 30027
3115	220 Ω	4822 100 10019
3203	1 kΩ	4822 100 10255
3408	100 kΩ	4822 100 10052
3122	1.5 Ω SR37	4822 111 30461
3217	220 Ω NFR25	4822 111 30544
3333	56 Ω SR37	4822 111 30029
3403	2.2 MΩ VR25	4822 110 72196
2101,2102, 2103,2104	2200 μF - 25 V	4822 124 20788
2105	68 μF - 6.3 V	4822 124 20671
2112	220 μF - 16 V	4822 124 20693
2115	68 μF - 16 V	4822 124 20689
2205	47 μF - 40 V	4822 124 20713
2305	10 μF - 25 V	4822 124 20697
2309	0.68 μF - 25 V	5322 124 14039
2310	10 μF - 40 V	4822 124 20708
2404,2406	0.47 μF - 63 V	4822 124 20719
2110,2111	1.2 nF - 63 V	4822 121 50439
2202	820 pF - 250 V	5322 121 54072
2308	1.5 nF - 63 V	4822 121 50432

SUPPLY–AND TURNTABLE–MOTOR–SERVO PRINTED BOARD

MISC.	C06	C07, C05	MP4 C0
7...	7401 7306 7317 7314 7413	7307 7414 7417 7302–7304 7308 7	
	7408 7410 7411 7412 7316 7415 7405 7404 7402	7416 7403	7315 7313
2...	2409 2402 2403 2401 2404 2405	2406 2407 2408 2310 2305 2306 2307 2304 2311	
3...	3409 3407 3406 3341 3401 3404 3332 3335 3412–3416 3419÷3424 3340 3315÷3321 3312 3313 3		
	3410 3408 3403 3411 3405 3342 3339 3338 3331 3334 3428÷3432 3336 3329 3330 3333 3301		

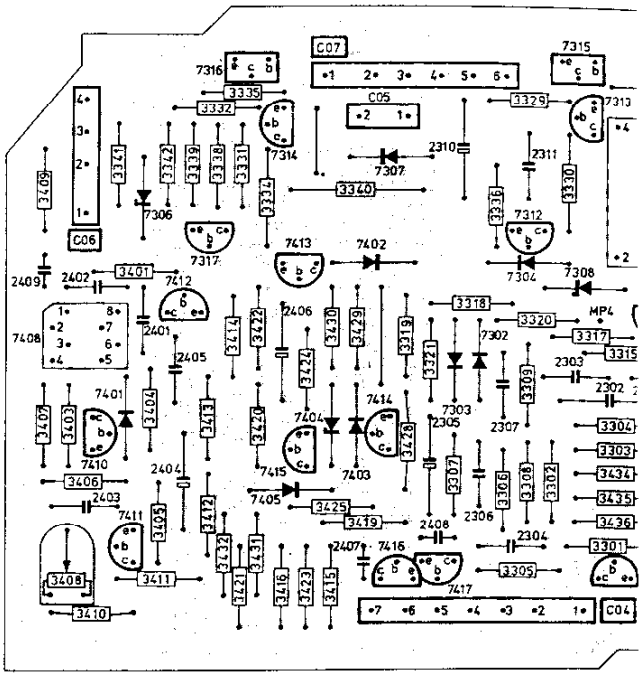

MISC.	1101	1102 C01	C03 MP1	S
7...	7112 7101 7113 7111 7110 7109 7108 7102÷7104 7			
	7116 7117 7106 7105 7114 7			
2...	2101 2103 2104 2112 2105 2109 2102 2115 2116 2113 2110			
3...	3120 3122 3121 3134 3101 ÷ 3110			
	3123 3135 3133 3113 3125 ÷ 3129			

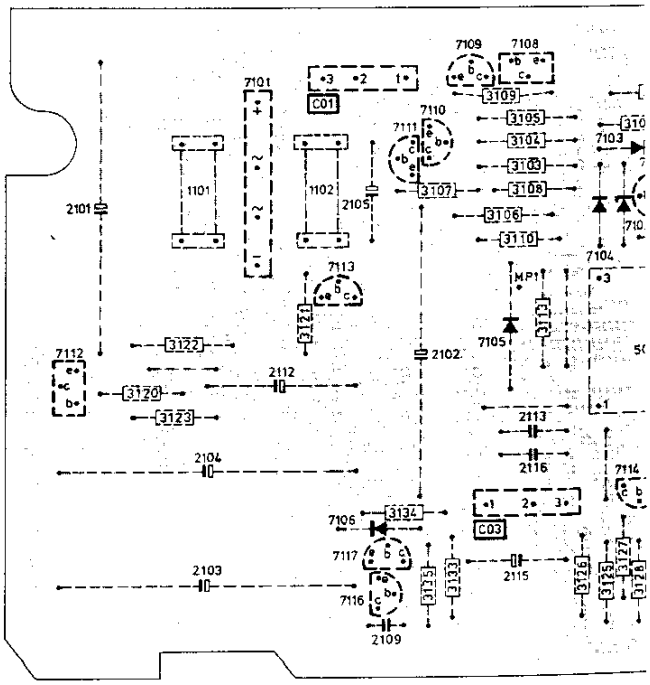

SUPPLY–AND TURNTABLE–MOTOR–SERVO PRINTED BOARD

MISC.	C06	C07, C05	MP4, C04, 5002	MP3	1105, 5003	MP2	C02
7...	7401, 7306, 7317, 7314, 7413, 7307, 7414, 7417, 7302÷7304, 7308, 7309÷7312, 7212, 7211, 7119						
	7408, 7410, 7411, 7412, 7316, 7415, 7405, 7404, 7402, 7416, 7403, 7315, 7313, 7418, 7305, 7203÷7206, 7210, 7201, 7209, 7202						
2...	2409, 2402, 2403, 2401, 2404, 2405, 2406, 2407, 2408, 2310, 2305, 2306, 2307, 2304, 2311, 2303, 2302, 2309, 2205, 2206, 2208, 2207, 2203, 2308, 2201, 2204, 2202, 2114, 2107, 2						
3...	3409, 3407, 3406, 3341, 3401, 3404, 3332, 3335, 3412–3416, 3419÷3424, 3340, 3315÷3321, 3312, 3313, 3434–3436, 3213÷3217, 3202–3211, 3115, 3116						
	3410, 3408, 3403, 3411, 3405, 3342, 3339, 3338, 3331, 3334, 3428÷3432, 3336, 3329, 3330, 3333, 3301–3309, 3212, 3433, 3314, 3131, 3114, 31						

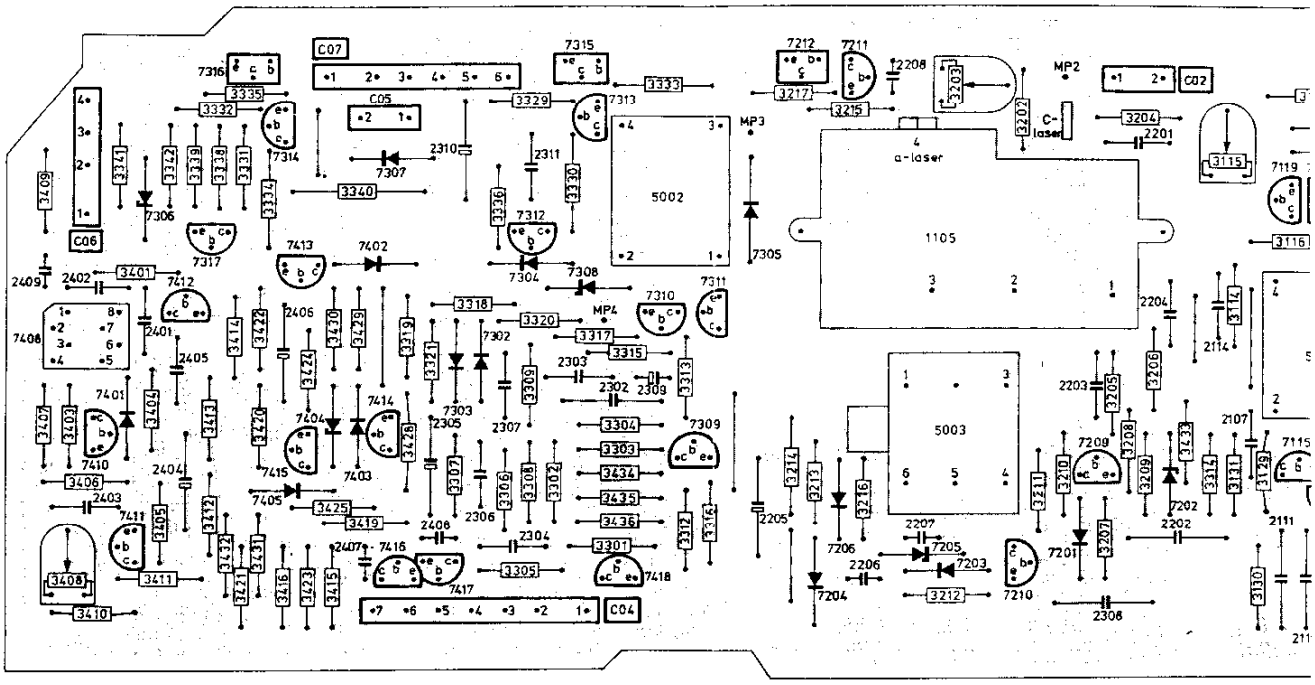

MISC.	1101	1102, C01	C03, MP1	5001	C02, MP2	5003, 1105	MP3	50
7...	7112, 7101, 7113, 7111, 7110, 7109, 7108, 7102÷7104, 7118, 7119, 7211, 7212, 7309–							
	7116, 7117, 7106, 7105, 7114, 7115, 7202, 7209, 7201, 7210, 7203÷7206, 7305, 7418							
2...	2101, 2103, 2104, 2112, 2105, 2109, 2102, 2115, 2116, 2113, 2110, 2111, 2107, 2114, 2202, 2204, 2201, 2308, 2207, 2208, 2206, 2205, 2309, 2302, 2							
3...	3120, 3122, 3121, 3134, 3101÷3110, 3116, 3115, 3202÷3211, 3212–3217, 3428, 3434–							
	3123, 3135, 3133, 3113, 3125÷3129, 3130, 3114, 3131, 3314, 3433, 3312, 330							

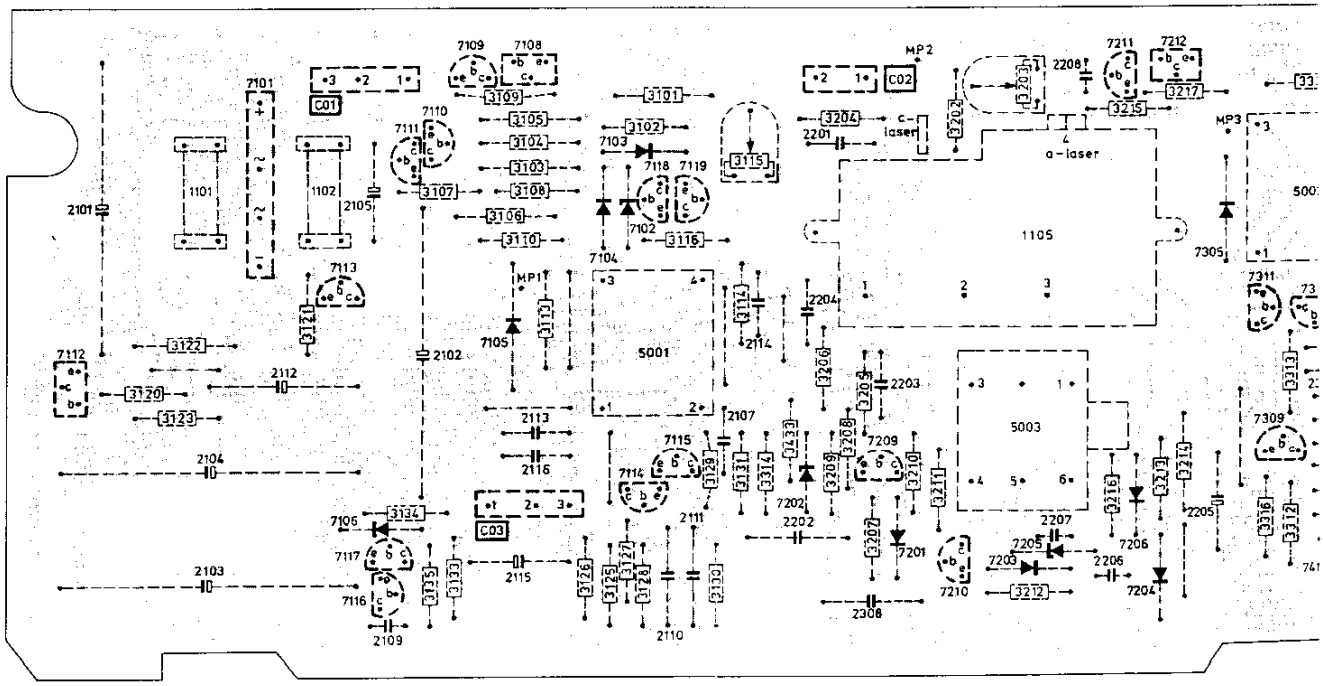

MP4.C04. 5002 MP3 1105.5003 MP2 C02 5001 MP1 C03 C01.1102 1101	MISC.
304.7308.7309÷7312 7212 7211 7119 7118 7102÷7104 7108 7109 7110. 7111. 7113 7101 7112	7...
7315. 7313 7418 7305 7203÷7206 7210 7201 7209 7202 7115 7114 7105 7106. 7117. 7116.	
7.2304. 2311 2303. 2302. 2309. 2205 2206. 2208. 2207. 2203. 2308. 2201. 2204. 2202. 2114. 2107 2111. 2110 2113 2116 2115 2102 2109 2105 2112 2104. 2103 2101	2.
312. 3313. 3434÷3436 3213÷3217 3202÷3211 3115 3116 3101÷3110 3134 3121 3122 3120	3...
3333. 3301÷3309 3212 3433. 3314. 3131 3114. 3130. 3125÷3129 3113 3133. 3135 3123	

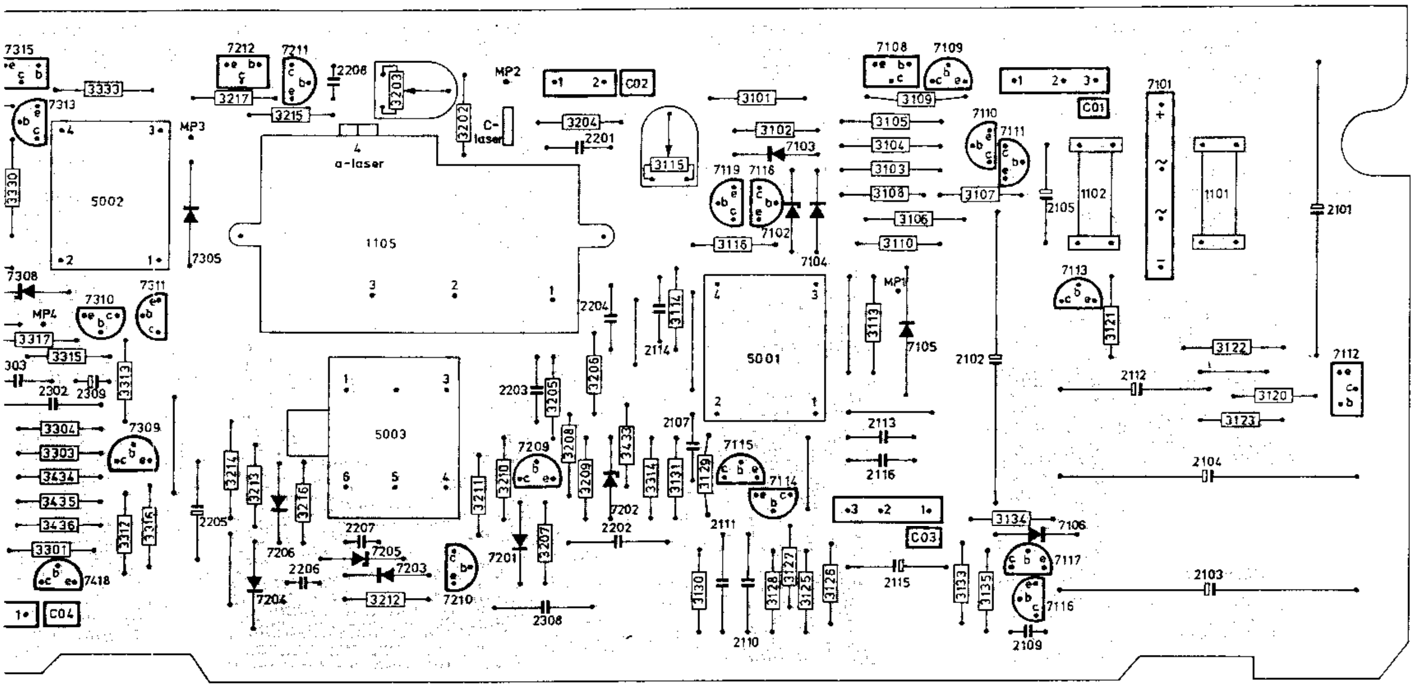

21772 E 13

5001 C02 MP2 5003 1105 MP3 5002 C04 MP4 C05 C07 C06	MISC.
02÷7104. 7118. 7119 7211 7212 7309÷7312. 7308. 7302÷7304. 7417. 7414. 7307. 7403. 7413 7314 7317 7306. 7401.	7...
7114. 7115 7202 7209. 7201. 7210 7203÷7206 7305 7418 7313. 7315 7416. 7402. 7407 7404. 7415 7405 7316. 7412. 7411 7410 7408	
13 2110. 2111. 2107. 2114. 2202. 2204. 2201. 2308 2207. 2208 2206 2205. 2309. 2302. 2303. 2311. 2304. 2307. 2306. 2305. 2310. 2408 2407. 2406 2405 2404 2401. 2403. 2402. 2409	2...
01÷3110 3116 3115 3202÷3211 3212÷3217 3428. 3434÷3436. 3432. 3313. 3315÷3321. 3340. 3419÷3425. 3412÷3416. 3335. 3332. 3404 3401. 3341 3406 3407. 3409	3...
25÷3129 3130. 3114. 3131. 3314. 3433 3312. 3301÷3309 3333. 3330 3329 3336. 3428÷3432 3334. 3331. 3338. 3339. 3342. 3405. 3411 3403. 3408. 3410	

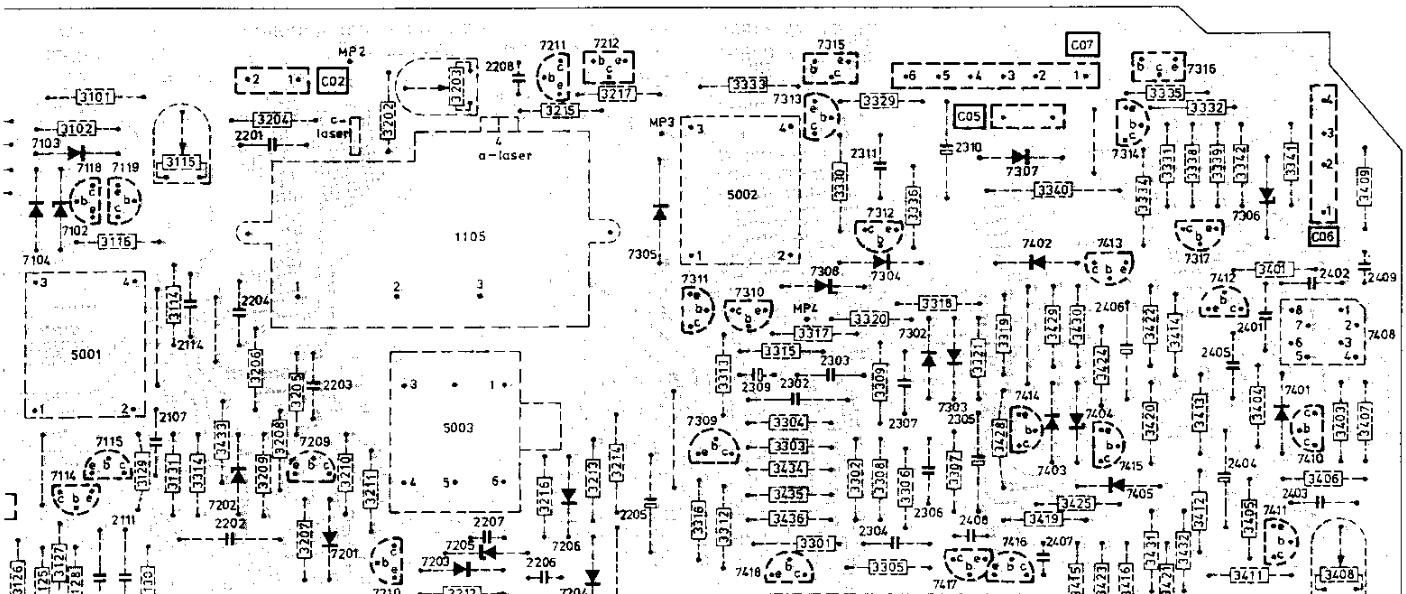

21771 E 13

CS 78 309

SWITCH--PANEL

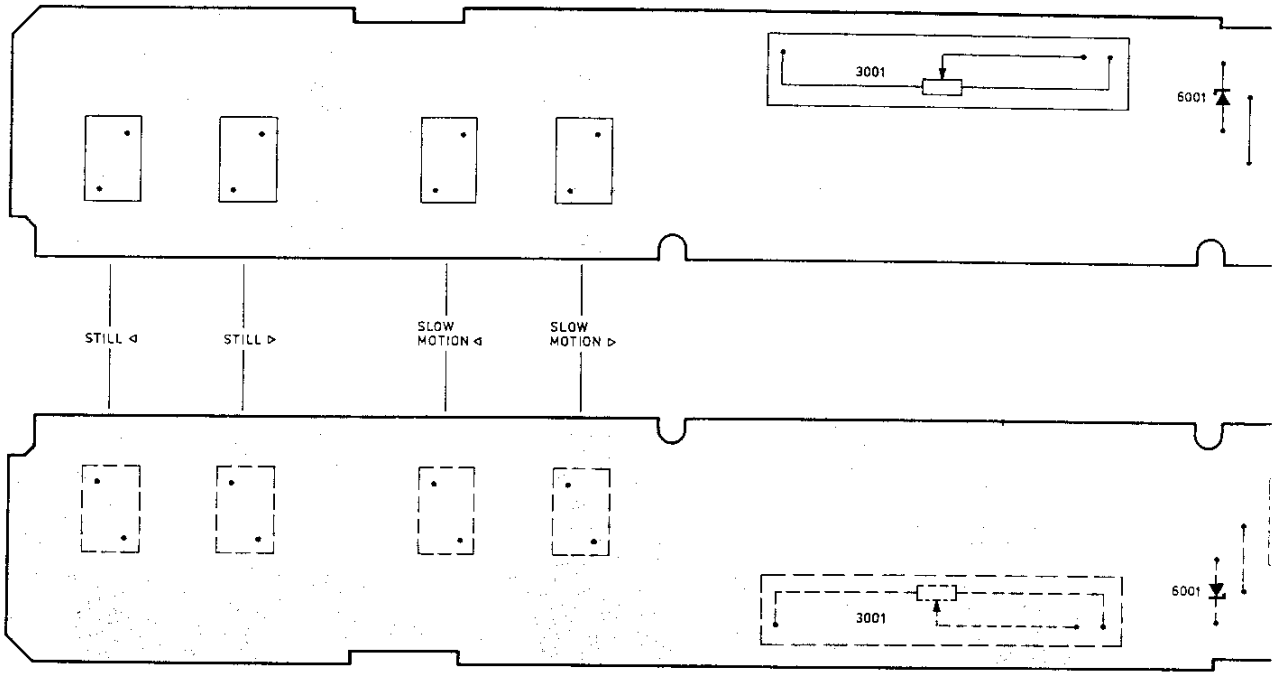

4822 276 10856	100 kΩ Log. 4822 105 10414	BAW62 BZX75/C1V4

LED–PANEL

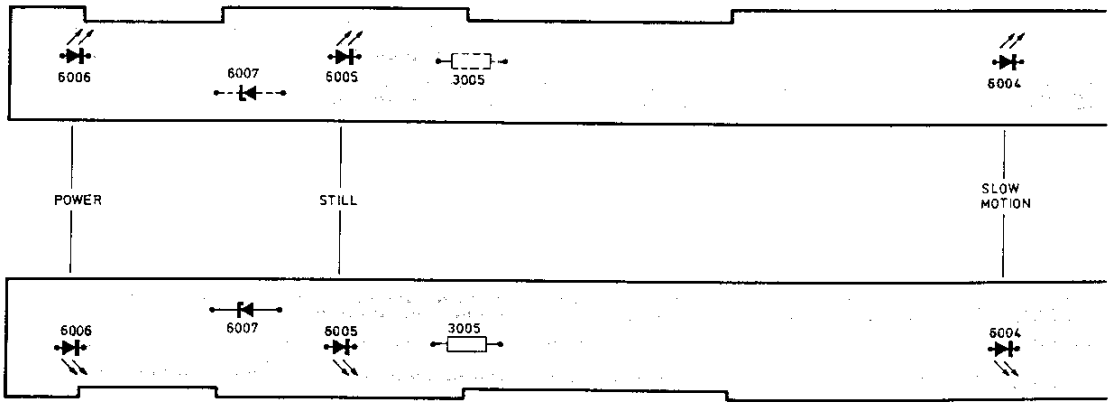

CQY24	4822 130 31314
BZX79/C5V6	4822 130 34173

FOR SERVICE MANUALS
CONTACT:
MAURITRON TECHNICAL SERVICES
www.mauritron.co.uk
TEL: 01844 - 351694
FAX: 01844 - 352554

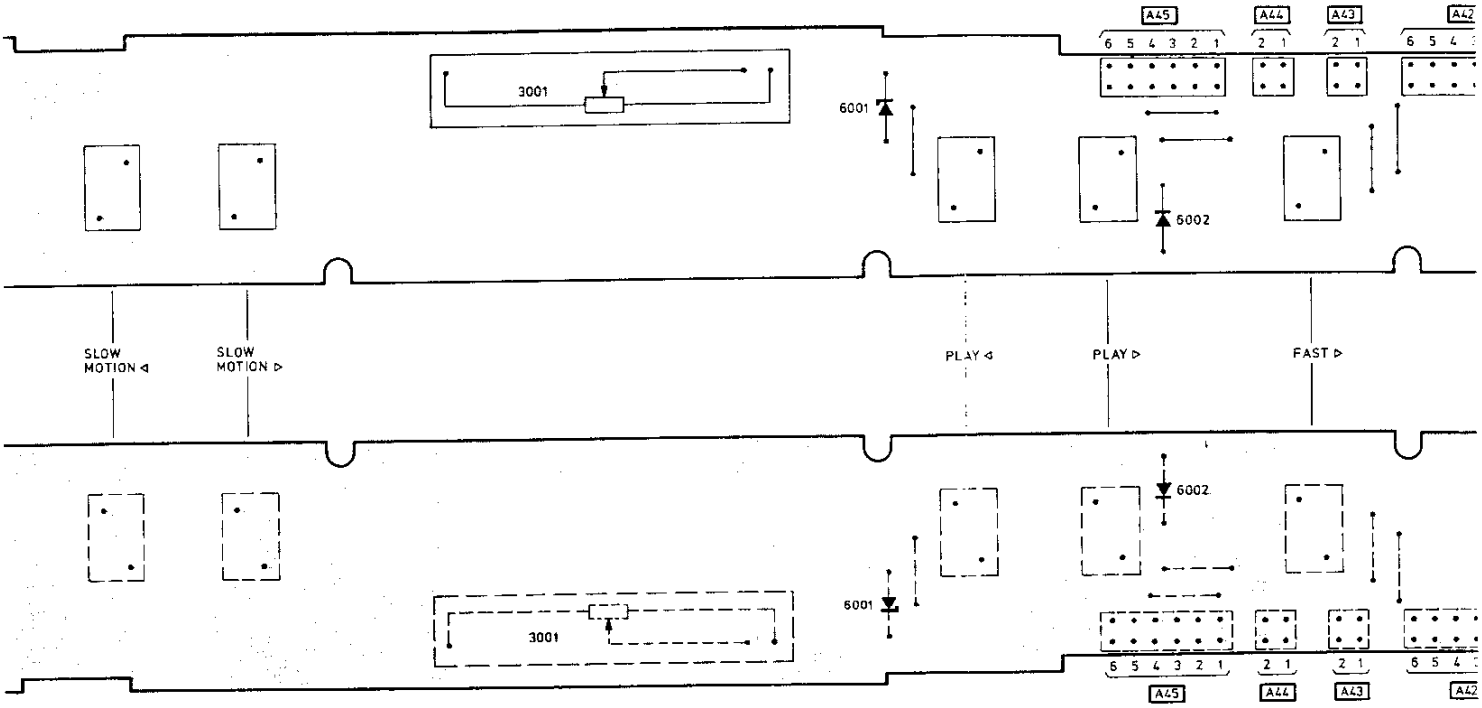

:56	100 kΩ Log.	4822 105 10414	BAW62 BZX75/C1V4	4822 130 30613 4822 130 34047

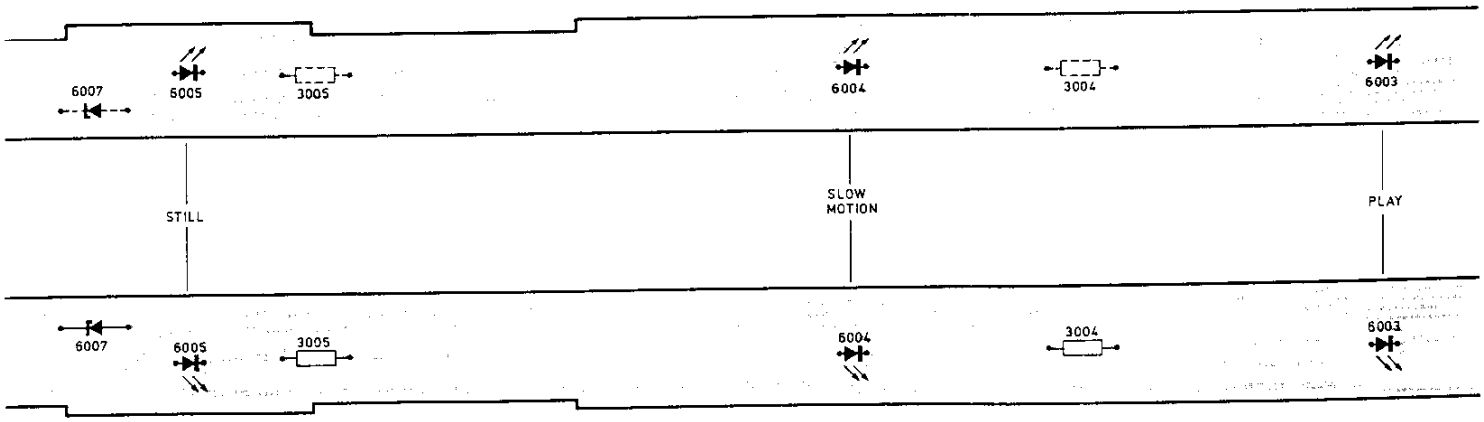

	4822 130 31314
;	4822 130 34173

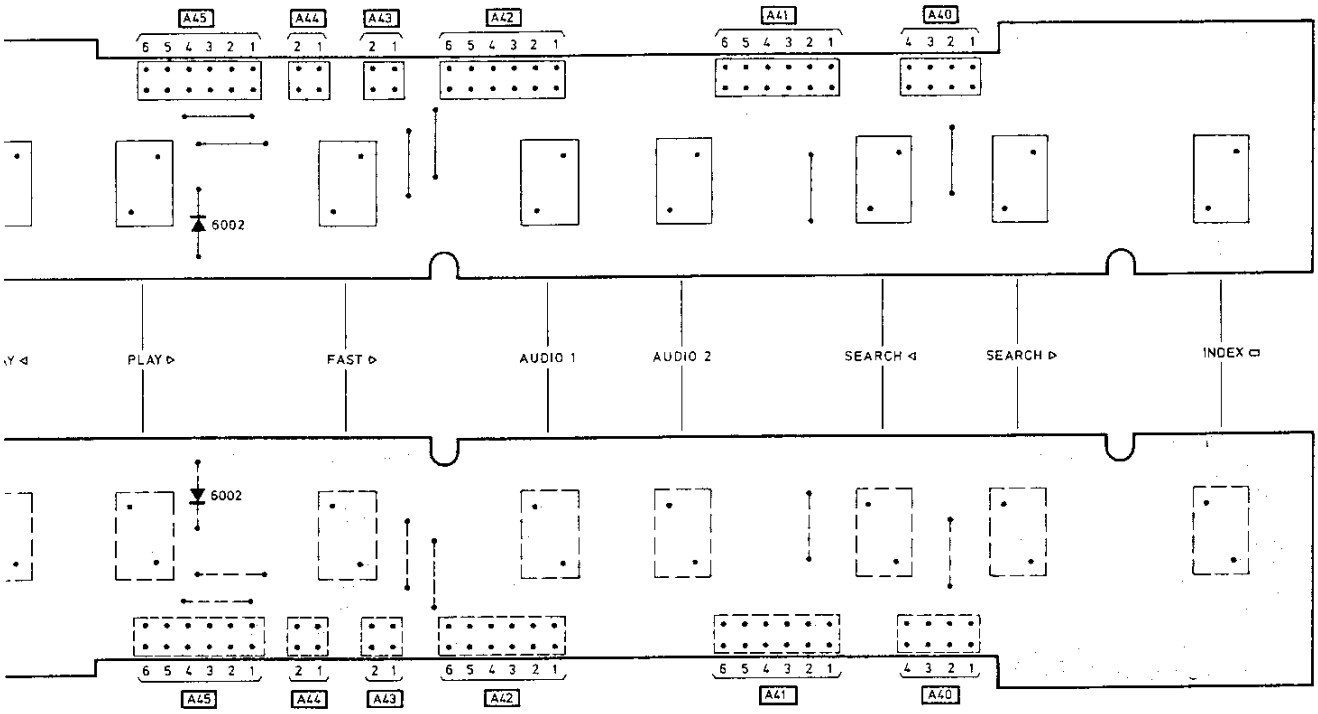

4822 130 30613
4822 130 34047

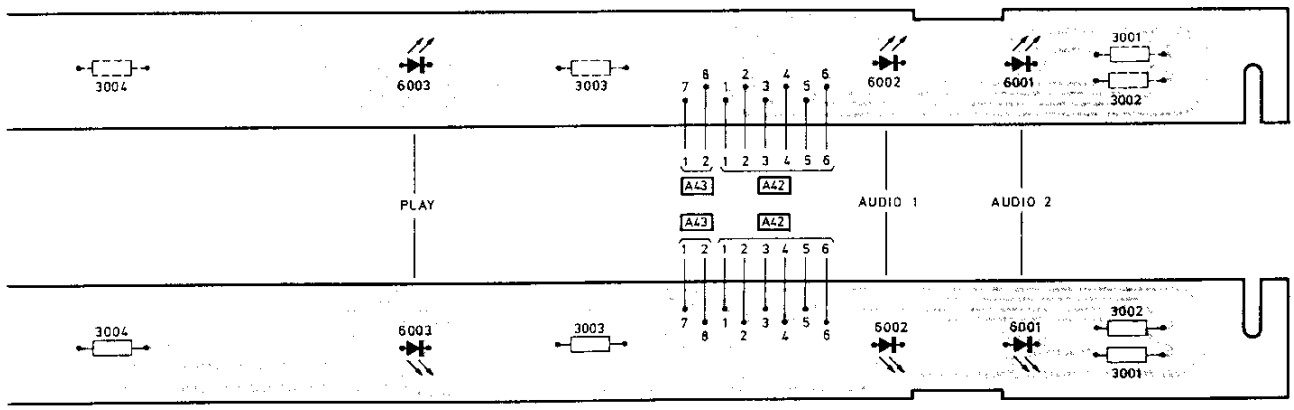

22629E21A

FOR SERVICE MANUALS
CONTACT:
MAURITRON TECHNICAL SERVICES
www.mauritron.co.uk
TEL: 01844 - 351694
FAX: 01844 - 352554

SURVEY OF SUPPLY VOLTAGES IN THE PLAYER

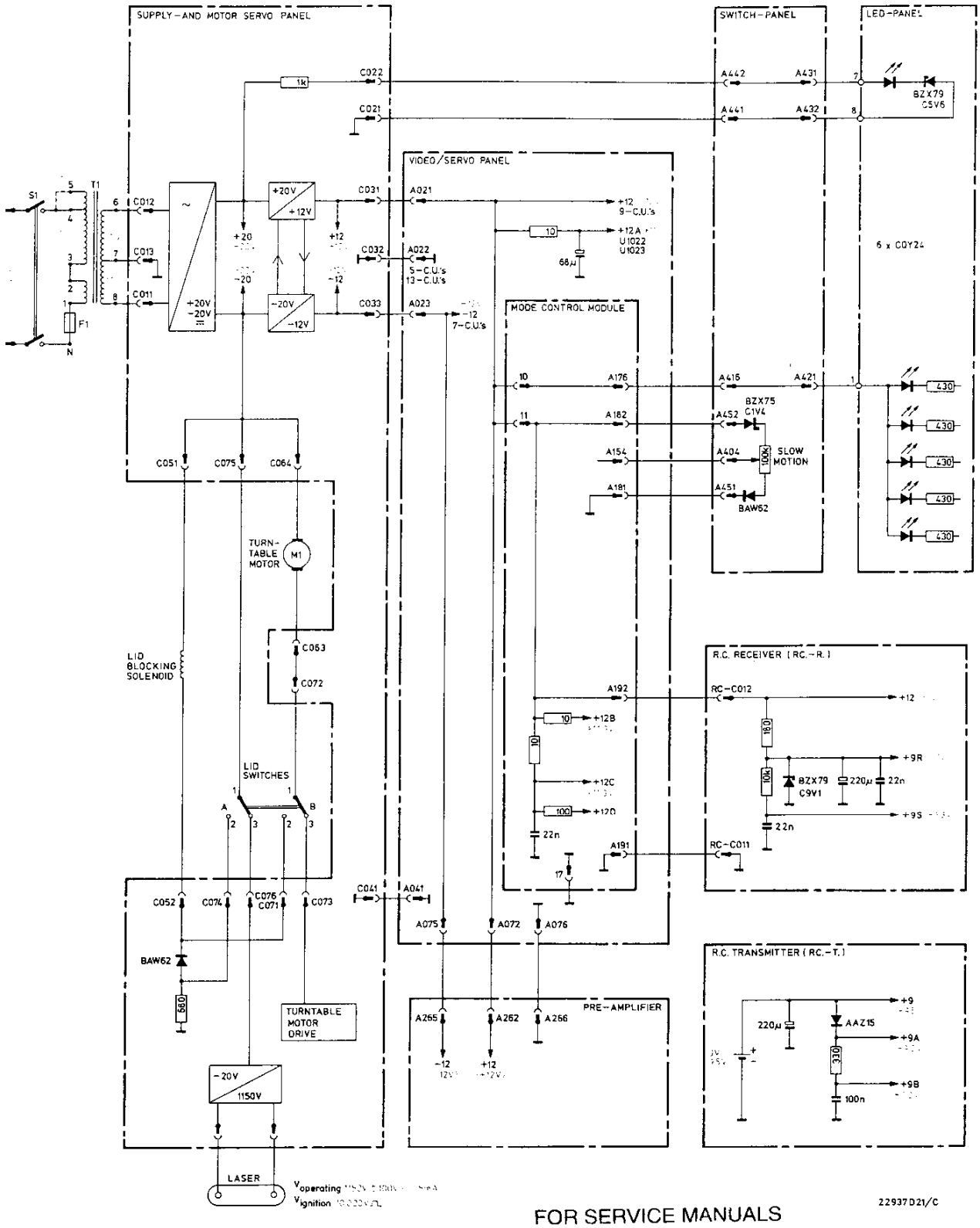

FOR SERVICE MANUALS
CONTACT:
MAURITRON TECHNICAL SERVICES
www.mauritron.co.uk
TEL: 01844 - 351694
FAX: 01844 - 352554

LOCATION OF COMPONENTS IN THE PLAYER

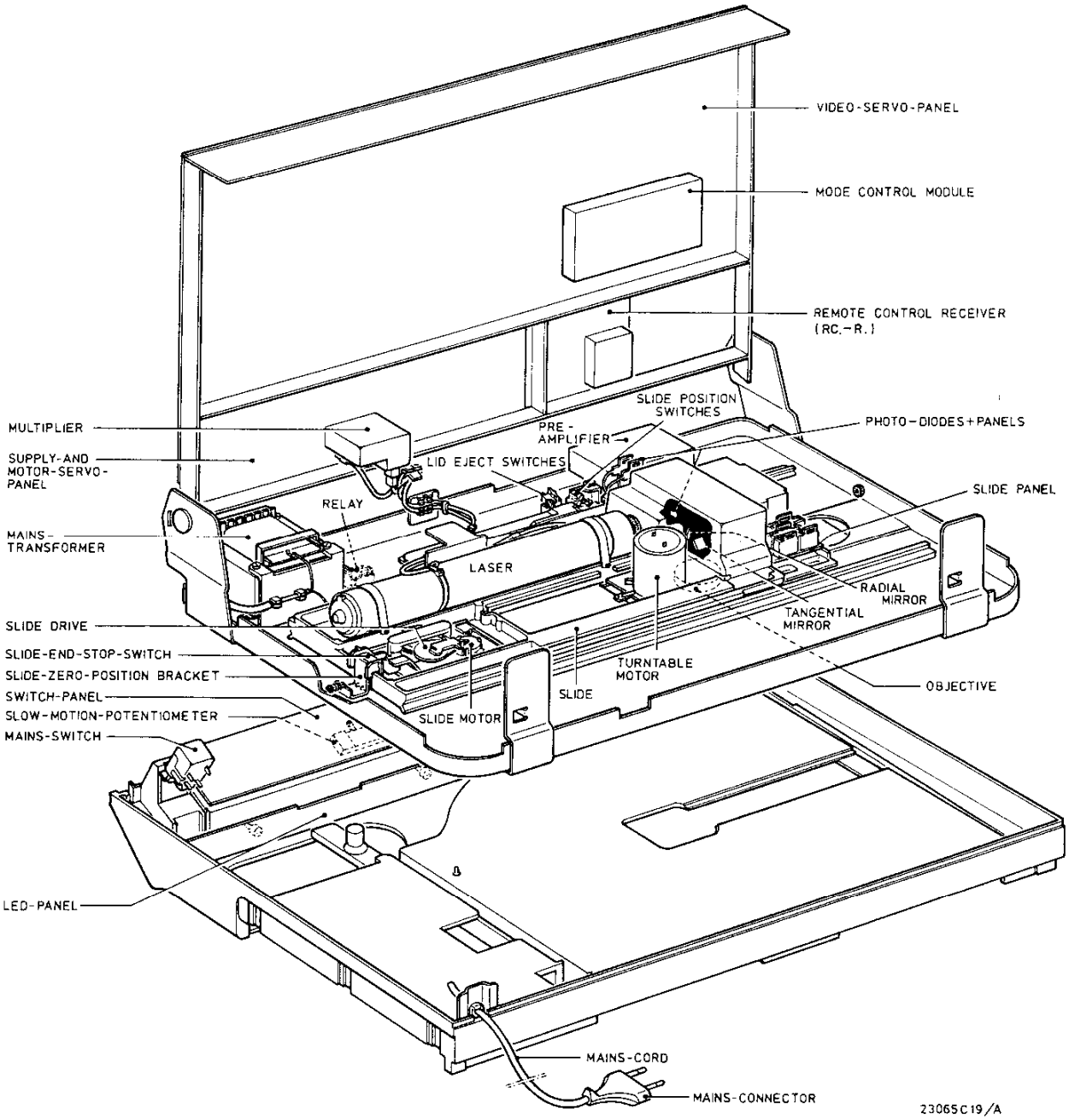

FOR SERVICE MANUALS
CONTACT:
MAURITRON TECHNICAL SERVICES
www.mauritron.co.uk
TEL: 01844 - 351694
FAX: 01844 - 352554

FOR SERVICE MANUALS
CONTACT:
MAURITRON TECHNICAL SERVICES
www.mauritron.co.uk
TEL: 01844 - 351694
FAX: 01844 - 352554

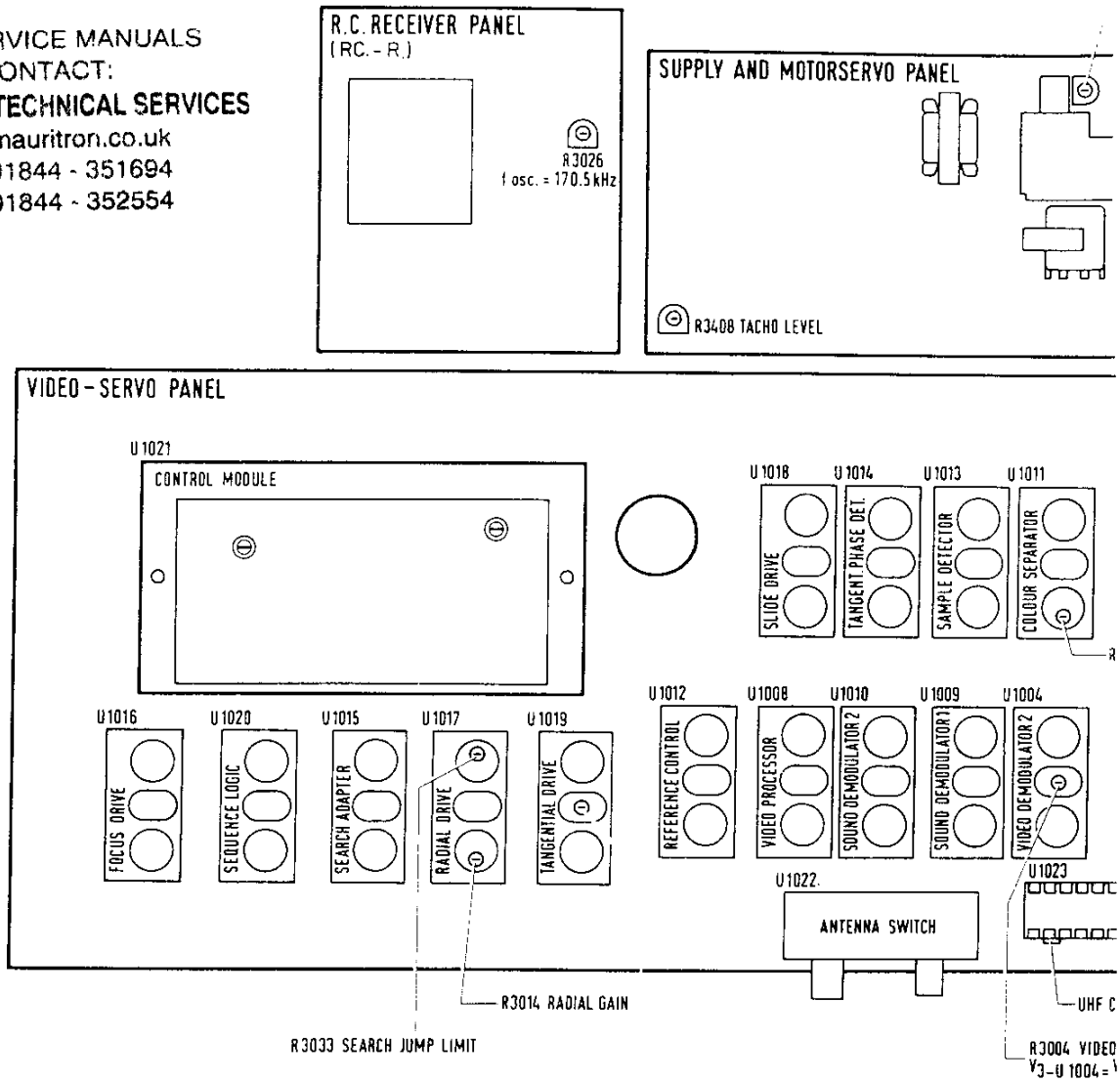

1. **Power supply**
   Insert a test disc in the player and select the normal play forward mode. Between the points AO22 (—) and AO21 (+) a voltage of 12 ± 0,5V should be present. If necessary, adjust R3115 for correct voltage reading. Between the points AO22 (+) and AO23 (—) a voltage of —12 ± 0,5V should be present. The voltage at the base of TS7117 should read 0V. ±60 mV.

2 **Laser current**
   Adjust R3203 until the voltage present at TP2 reads 5 ± 0,15V.

3. **Tacho circuit**
   Turn power ON. Open lid. Inject a 400 Hz 0,5Vpp signal into C062.
   Adjust R3408 until point C046 just becomes high (≥6V).

4. **Amplitude of video signal from video demodulator 1 and 2**
   Insert a test disc in the player and select the normal play forward mode. Adjust R3004 in U1004 until the amplitude of the video signal at pin 3 on U1004 equals the amplitude of the video signal present at pin 11 on U1004.

5. **Amplitude of video signal at monitor output**
   Insert a test disc in the player and select the normal play forward mode. Terminate the monitor output with 75 ohm. Adjust R3007 in U1003 until the amplitude of the video signal at the monitor output reads 1Vpp.

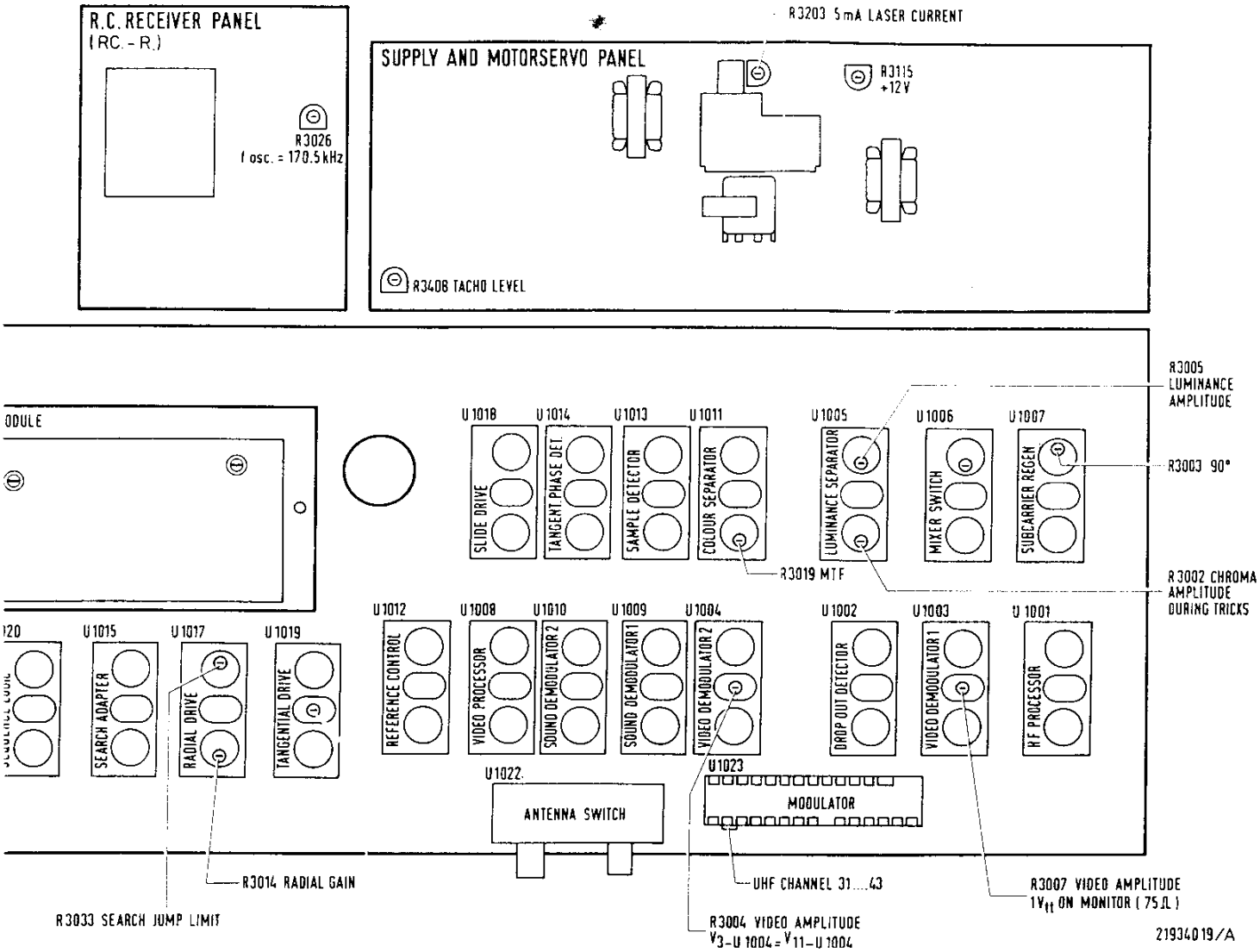

ıd select the normal
e points AO22 (—)
± 0,5V should be
R3115 for correct
ɔints AO22 (+) and
V should be present.
17 should read 0V.

resent at TP2 reads

ɔt a 400 Hz 0,5Vpp

just becomes high

4. Amplitude of video signal from video demodulator 1 and 2

Insert a test disc in the player and select the normal play forward mode. Adjust R3004 in U1004 until the amplitude of the video signal at pin 3 on U1004 equals the amplitude of the video signal present at pin 11 on U1004.

5. Amplitude of video signal at monitor output

Insert a test disc in the player and select the normal play forward mode. Terminate the monitor output with 75 ohm. Adjust R3007 in U1003 until the amplitude of the video signal at the monitor output reads 1Vpp.

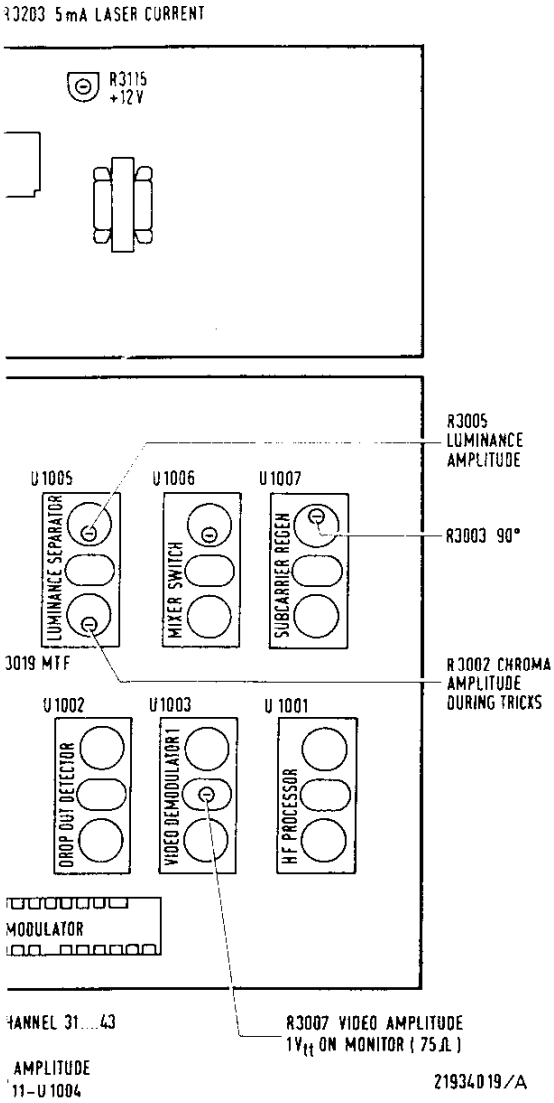

FOR SERVICE MANUALS
CONTACT:
MAURITRON TECHNICAL SERVICES
www.mauritron.co.uk
TEL: 01844 - 351694
FAX: 01844 - 352554

6. Amplitude of video signal at monitor output during trick operation

Insert a test disc in the player and select the still picture mode; picture number 7500 (colour bar). Adjust R3005 in U1005 for 1Vpp video signal amplitude at the monitor output (terminate with 75 ohm !).
Adjust R3002 in U1005 for equal burst amplitude in still picture mode and normal play forward mode.

7. 90° adjustment of subcarrier regenerator

Insert a test disc in the player and select the still picture mode; picture number 2855 (red pattern). Adjust R3003 in U1007 for minimum picture flicker.

8. Radial gain

Insert a test disc in the player and select the still picture mode; picture number 20.000. Inject a 3,5 kHz 5Vpp signal in pin 4 on U1017. Connect one channel of the oscilloscope to pin 4-U1017 and the second channel to pin 1-U1017. Adjust R3014 in U1017 for a 90° ± 5° phase shift between the signals at pin 1 and pin 4 on U1017.

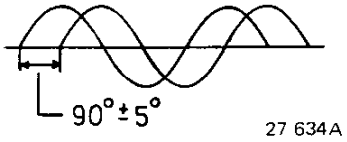

9. Search jump limit

Insert a test disc in the player. Connect oscilloscope via 10:1 attenuator to pin 1 on U1017. Press the Search Forward button. Adjust R3033 in U1017 until the time interval between two signals at pin 1-U1017 is 70 to 100 msec.

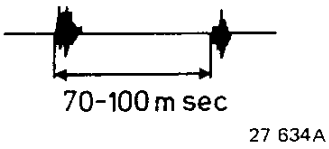

10. MTF voltage

Insert a test disc in the player and select the still picture mode; picture number 180. Adjust R3019 in U1011 until the voltage present at pin 11 on U1011 reads 1,7V.

ADJUSTMENT OF THE LIGHT PATH

For the light path adjustment the following tools are required:

- mirror alignment tool
- adjustment eccentric
- pupil filling meter
- control box

} 4822 395 30105

- connecting leads 4822 320 11003
- Dual-trace oscilloscope with X via B facility, e.g. PM3226P
- LF generator with low output impedance
- Adjustable regulated power supply (min. 12V)
- Test disc
- Lid peg 4822 402 60761

When adjusting the light path observe the sequence stated hereafter.
Remove the radial and tangential drive (U1007 and U1019).
Unplug connector A06 (connecting the objective). Isolate the turntable motor by unplugging connector C06. Disengage the slide drive.
Unlock the safety system. For this, remove the right ornamental cover.
Press locking lever downwards and simultaneously push the lid locking peg to the right. Maintain this peg in the position thus obtained by sliding a spare locking peg between the two pegs on the lid.
Remove the dust cap that covers the optical components.

Avoid any direct eye exposure to the laser beam!

1. **Radial and tangential tilting mirrors**

   Remove the objective and place the mirror alignment tool in the objective aperture. Turn the player ON. On the ground glass plate we see now a silhouette picture showing a pattern identical to the one on the ground glass. Silhouette picture and pattern on the ground glass shall not be displaced more than 0,75 mm relative to each other. If the deviation exceeds this value, the mirrors should be re-adjusted by means of the adjustment eccentric (adjustment positions A1 and A2).
   The position of the mirrors should be checked with the mirror alignment tool as close as possible to the turntable spindle.

2. **Spot lens**

   Place the pupil filling meter in the objective aperture. This meter is connected to input PQRS on the control box. Select position (P-Q) (R-S) on the control box panel. The two outputs of the control box are connected to the inputs of the oscilloscope. Switch the oscilloscope to X via B position. A light spot will now become visible on the scope screen. Place this light spot at the point of intersection of the X and Y axis by means of the position controls on the oscilloscope.
   Turn the player ON. The light spot will move. When rotating the pupil filling meter in the objective aperture, the light spot will follow a circular path with a radius indicating the error position of the spot lens. The spot lens may now be adjusted by turning the adjustment screws B1 and B2 until the light spot remains within 50 mV from the point of intersection of the X and Y axis.
   When rotating the pupil filling meter in the objecture aperture, the light spot should remain within 50 mV from the point of intersection of the X and Y axis.
   Turn the player OFF and remove the pupil filling meter.

3. **Diode**

   Reinstall the objective in the objective aperture. Make sure that the objective's terminal marked + be connected to the red connecting lead.
   Install the decorative plate on the objective and put a rubber band (rubber packaging band or the like) over the objective as shown in the figure below.

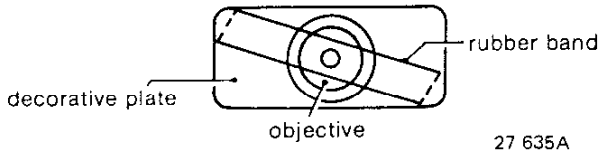

Fig. 1

Connect the objective's connector A06 via the circuit below to the DC source and the LF generator (Fig. 2).

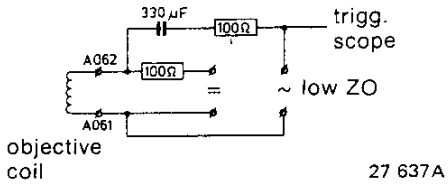

Fig. 2

Connect the two diode connectors via the associated cable to the control box. Attention: yellow marked plug in yellow connector and green marked plug in green connector!.
Connect the cable to input ABCD R1-R2 on the control box.
Insert the test disc so that the **non**-recorded side is facing downwards (turntable motor switched off).
Turn the player ON. Place the switch on the control box in position (A+C)-(B+D). Bring the objective into focus by raising the DC voltage.
Set the frequency (± 20 Hz) and the amplitude of the LF generator signal until an S-curve becomes visible on the scope screen. Externally trigger the oscilloscope directly on the LF generator (Fig. 2). Make the width of the S-curve on the scope screen approximately 2 cm.
It may be necessary to slightly vary both the frequency and amplitude of the LF generator signal and the DC current flowing through the objective before the desired picture is obtained.
Turn the adjustment screws D1 and D2 for maximum amplitude and symmetry of the S-curve (refer to Fig. 3).

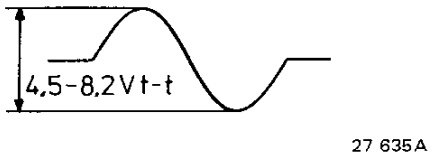

Fig. 3

The peak-peak value of the S-curve should be in the 4,5 -8,2V range.

If the minimum value is not attained, it is recommended to inspect the parts in the light path for the presence of dust and/or dirt; if required, clean them.
Subsequently, adjust the control box to the signals (B-D) and (A-C), being the position signals of the diode. Set these signals by means of D1 and D2 to a value of ≤ 0.2V.
Check the S-curve and, if necessary, repeat these adjustments until the S-curve and the position signals are optimal.
If no S-curve can be found, switch the control box to sum signal A+B+C+D. Render the sum signal maximal by means of D1 and D2; the S-curve and position signals may then be adjusted as described above.
Switch the control box again to position (A+C)-(B+D) and check the radial offset signal (signal R1-R2) on the other channel of the scope.
Compare this signal with the figures below. If deviations are found, check and adjust once again the components stated with the figures.
The scope's sensitivity for the R1-R2 signal shall be 20x the sensitivity for the S-curve.

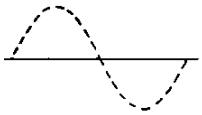

1 Ideal

2 Tilting mirrors and/or spot lens not adjusted optimally

3 Diode not adjusted optimally

4 Soiled optical part.
Uneven sensitivity across diode surface.

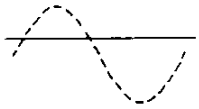

5 Soiled optical part.
Uneven sensitivity of radial diodes

----- S-curve
——— Radial offset curve

Fig. 4

27 636A

FOR SERVICE MANUALS
CONTACT:
MAURITRON TECHNICAL SERVICES
www.mauritron.co.uk
TEL: 01844 - 351694
FAX: 01844 - 352554

4. Quarter-wave plate

Place U1017 and U1019 back in the player. Reconnect the objective and the turntable motor. Release the lid lock.
Insert a test disc in the player, start the player and wait for the picture to become stable. Select the still picture mode.
Connect the oscilloscope to point 1 on the focus drive (U1016).
By means of the adjustment screws E1 (coarse) and E2 (fine) adjust the λ/4 plate for minimum ripple on the signal present at point 1 of the focus drive (Fig. 5).

27 635A

Fig. 5

Incorrect adjustment of the λ/4 plate makes the objective rather noisy. When the λ/4 plate is properly adjusted, noise is minimal.

5. Grating

Connect the player to a CTV set. Tune the CTV receiver to the VLP channel. Insert the test disc in the player. Go to picture 16.000.
Select the still picture mode. Remove the radial drive unit (U1017).
Turn the adjustment screw (C) of the grating fully clockwise
Connect the oscilloscope to pin 1 on U1017. Turn adjustment screw C counterclockwise until the signal at pin 1-U1017 is maximal.
Reinstall U1017 in the player. Select the normal play forward mode. The picture displayed must be free of interference.
At picture number 16.600 the picture should turn from blue to yellow without any loss in quality.

6. Lockpaint all the adjustment screws!

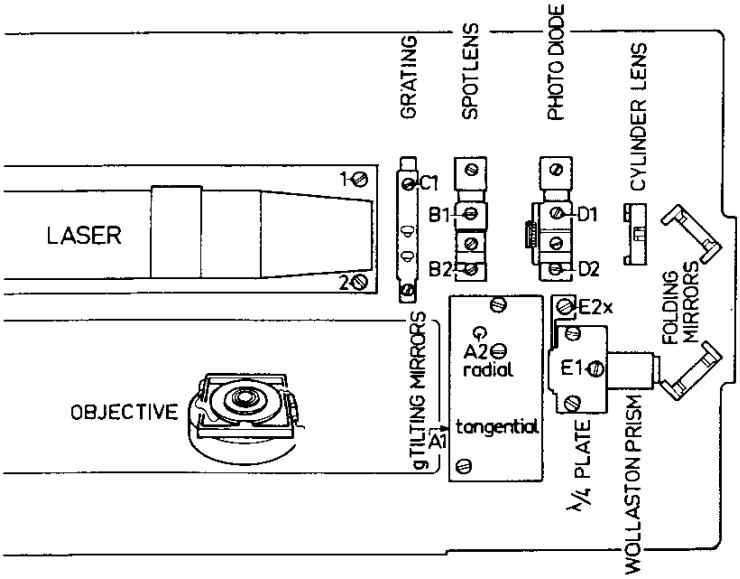

Fig. 6

22 289B
CS 78 313

DEMOUNTING/MOUNTING INSTRUCTIONS

(See exploded view of the cabinet)

— **Right hand ornamental cover** (pos. 142)

Remove the screw pos. 44 at the back. Shift the cover backwards and take it out.

— **Left hand ornamental cover** (pos. 101)

Remove screw pos. 44 at the back. Shift the cover backwards and take it out.
When remounting make sure that the hooks of the covers engage correctly in the apropriate holes.

— **Eject cover** (pos. 103)

Remove the lefthand ornamental cover. Push with a finger under the eject cover against a catch until the catch comes free. Then push it upwards and take the eject cover out.

— **Bottom cover** (pos. 113)

Put the player upside down on a soft clean surface. Remove the four screws pos. 42 and remove the bottom cover.

— **Lid** (pos. 116)

Remove both ornamental covers. Open the lid. Remove both screws pos. 41 and take them out. Remove the lid.

— **Slow motion cover** (pos. 127)

Push with a screwdriver through the hole in the switch panel against the catch until it releases. Lift the cover at the right hand side and unhook the left hand side. Remove the cover.
When remounting, make sure that the lever of the potmeter engages in the fork of the slide knob.

— **Ornamental cover** (pos. 109)

Remove the bottom cover and the slow motion cover. Unhook the six catches and lift the fronside of the cover. Unhook the cover at the topside and remove it.

— **Turntable** (pos. 135)

Remove ornamental ring pos. 131. Remove the three screws pos. 12. Remove the turntable pos. 135 and the centring ring pos. 137.

— **Objective**

Remove the decorative plate pos. 136. Unhook the corners of the objective fixing plate one by one from the magnet. Lift the fixing plate a little and remove both connectors.
Remove the objective.
When remounting make sure that the connector marked + is connected to the red wire.

— **Switch panel** (pos. 503)

Remove the bottom cover. Release the locking springs pos. 83 with a pair of pliers and remove them. Make sure that when remounting the lever of the potmeter engages the fork of the slide knob.

— **Top cover** (pos. 104)

Remove bottom cover, switch panel, both ornamental covers, eject cover and lid. Disconnect the wires from the mainsswitch. Remove the six screws that hold the top cover (pos. 36, 40, 43).

MECHANICAL ADJUSTMENTS

Adjustment of the slide drive unit

Remove the bottom cover. Hinge out the PC panels, disengage the slide drive and loosen both screws of the unit a few turns.
Move the slide back and forth a few times. The spring in the slide drive unit will give the correct pressure to the rack and pinion engagement. Move the slide to the middle position. Tighten both screws. Move the slide back and forth again. It must run smoothly all the way. If at a certain point any hindrance is felt, the above adjustment must be carried out at that point.
Reengage the slide drive.

Adjustment of the slide end stop

Remove the lefthand top cover. Insert the test disc in the player. Close the lid.
Push the search forward button for approx 1 sec. Wait until a stable picture appears.
Loosen the slide end stop screw a few turns and shift the slide end stop to the outer position. Tighten the screw.
Push reverse play. The player will now stop on picture number 189. Operate the still picture reverse button up to picture number 180. Switch the power off.
Release the slide end stop and allow it to shift towards the slide under pressure of spring pos. 281. Tighten the screw again. Put on a program disc. Close the lid and check that the player starts correctly.

Adjustment of the lid switches

Remove the bottom cover. Put the player in the servicestand. Hinge the PC panels out.
Open the lid. Loosen the fixing screw of the lid switches (pos. 16 of the exploded view) a few turns.
Close the lid so far that the peg engages the first catch. The lid is then still 5 mm open.
Adjust the lid switches so that the leafsprings of the switches just touch the operating lever.
Tighten tne fixing screw. Check on a correct operation of the lid switches.

DEMOUNTING/MOUNTING OF THE SLIDE

Demounting

Remove the decorative plate of the objective, and the objective itself. Remove the bottom cover. Put the set under 45°, and hinge the PC panels out.
Remove the slide drive unit (screws A) Undo the cable guidance from the slide (snap construction B).
Remove all connectors from the slide and bend them aside. Remove the slide position switches (screw C).
Remove the pre-amplifier (U1000). Disconnect the laser from the power supply, also disconnect the turntable motor. Loosen screws D a few turns and turn the guiderail-leafsprings counter clockwise. Tighten screws D. Remove the six screws E which hold the upper guiderail.
Remove the upper guiderail. Remove the plastic ball-bearing strip.
The slide can now be tilted a little, thus giving acces to the dust cover which must be carefully pulled off the objective magnet. Now the slide can be removed.
Note: never loosen the lower guiderail

Mounting

Make sure that the lower rack is kept in the correct position by the two dents in the chassis.
Place the end of the ballbearing strip at a distance of approx 6 mm from the right end of the lower guiderail. Make sure that the toothed wheel of the strip engages in the rack.
Place the slide in the utmost right position. (slide must touch the slide end stop).
Move the slide to the left and check that the ballbearing strip stays within the stroke of the slide.
Snap the dust cover on the objective magnet.
Make sure both connecting wires remain free.
Move the slide to the right. Check that the upper rack is in the correct place.
Put the end of the upper ballbearing strip at approx 6 mm from the left end of the slide. Make sure that the toothed wheel of the bearing strip engages in the rack of the slide as well as in the loose upper rack.
Mount the upper guiderail but do not tighten screws E.
Loosen screws D and turn the guiderail leaf springs in the adjust position (see dotted position in drawing).
Tighten screws D and next screws E.
Move the slide back and forth. It must run smoothly and without play. If not, loosen screws E and repeat the adjustment of the guiderail leaf springs.
After screws E have been tightened again, loosen screws D, turn the leaf springs in the utmost clockwise position and tighten screws D again.
Mount the slide drive and adjust it (see chapter: mechanical adjustments).
Mount and adjust the slide position switches.
Mount the pre-amplifier and restore all connections.
Snap in the cable guidance.
Put the player on the service stand and mount the objective.
Check and if neccessary correct the following adjustments: Radial amplification.
Search jump limit.
Grating adjustment.

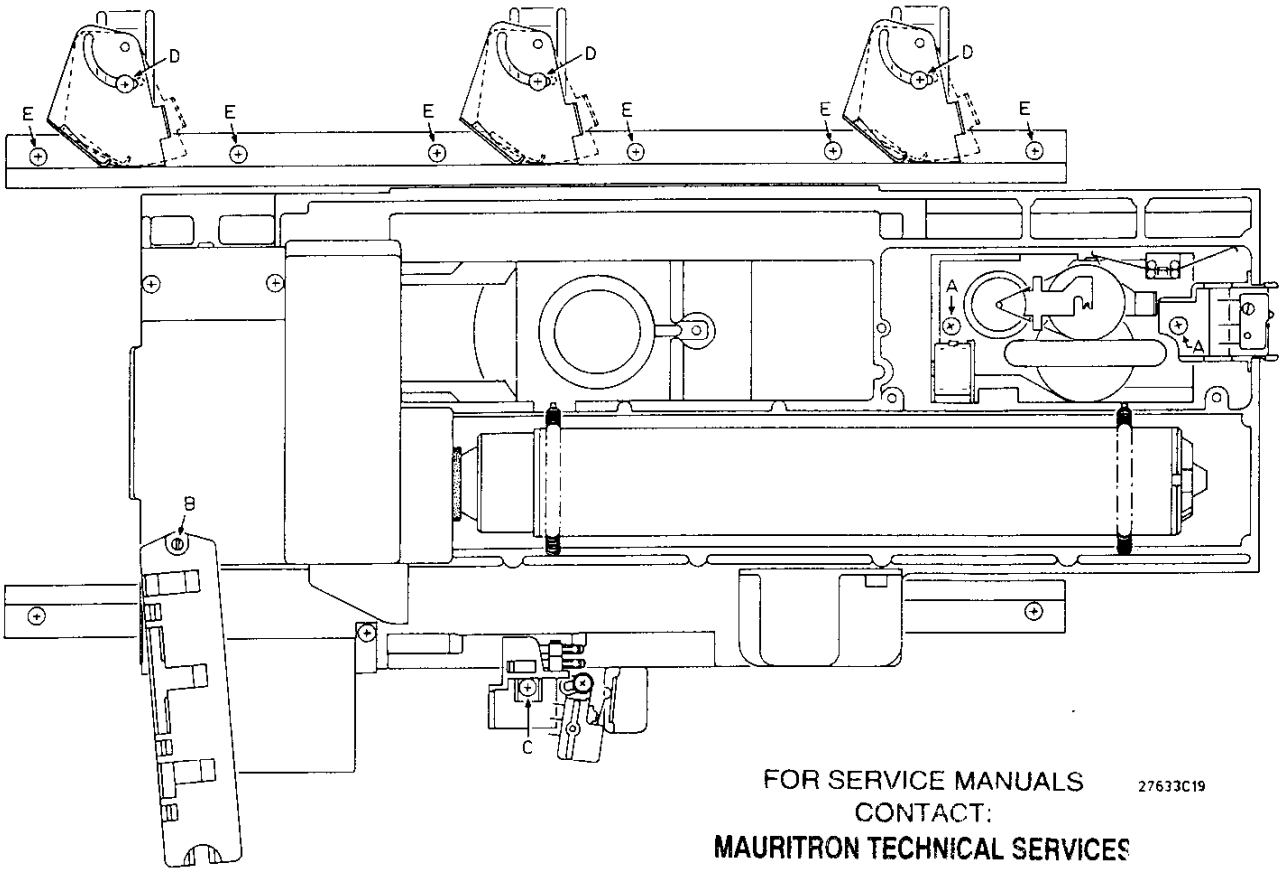

FOR SERVICE MANUALS CONTACT:
MAURITRON TECHNICAL SERVICES
www.mauritron.co.uk
TEL: 01844 - 351694
FAX: 01844 - 352554

27633C19

EXPLODED VIEW CABINET

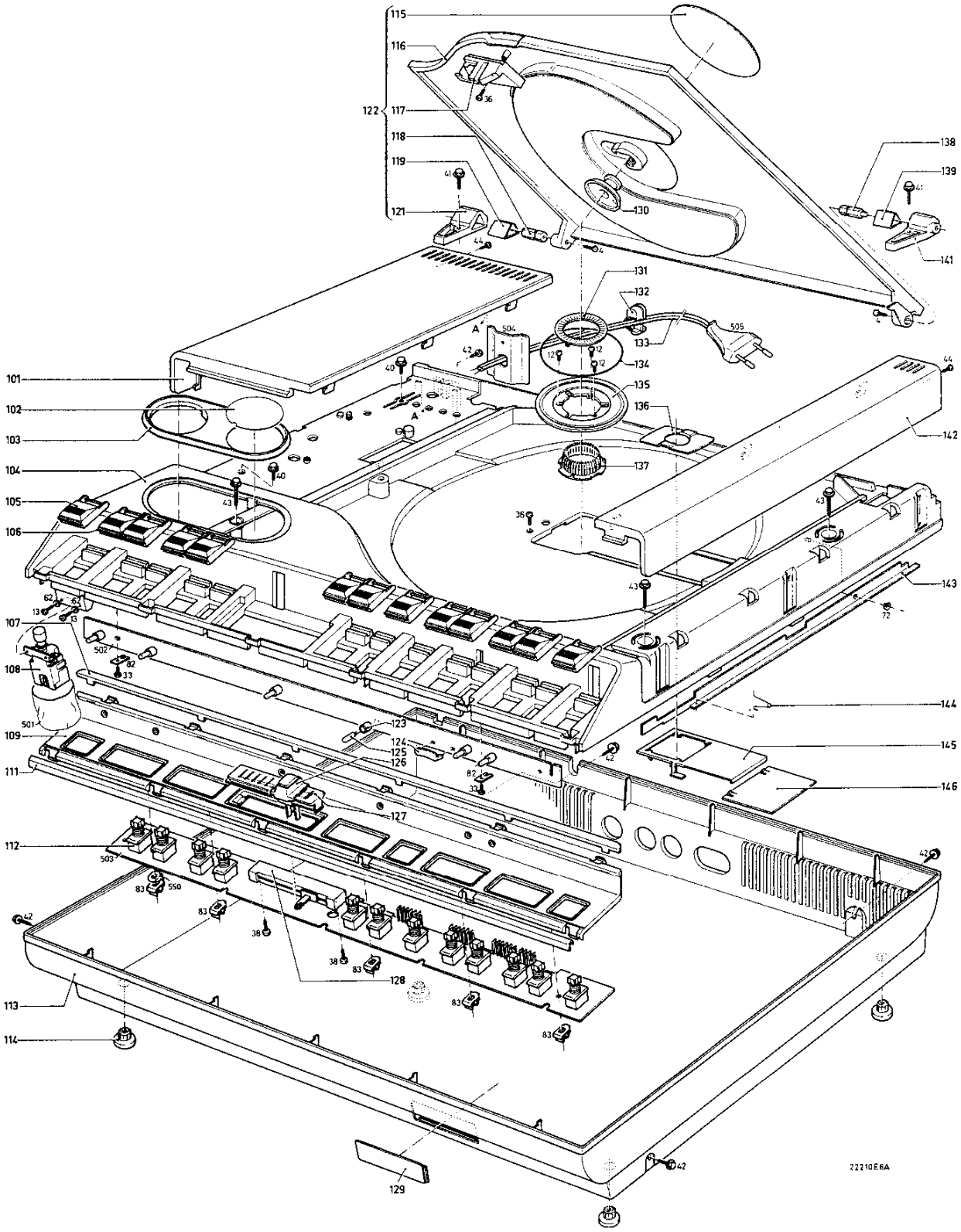

EXPLODED VIEW CHASSIS

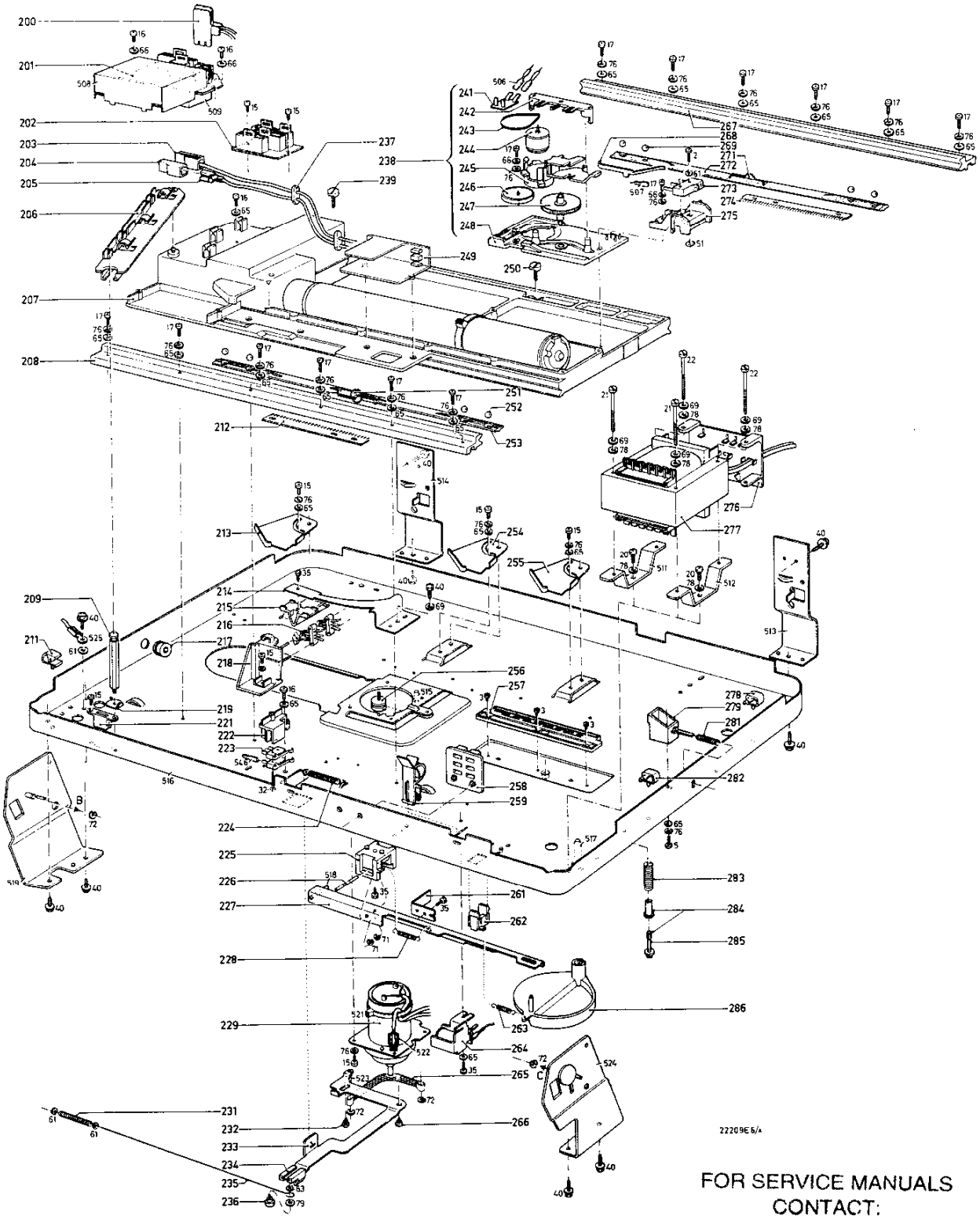

FOR SERVICE MANUALS
CONTACT:
MAURITRON TECHNICAL SERVICES
www.mauritron.co.uk
TEL: 01844 - 351694
FAX: 01844 - 352554

CS 78 315

T

EXPLODED VIEW PRINTED BOARDS ASSEMBLY

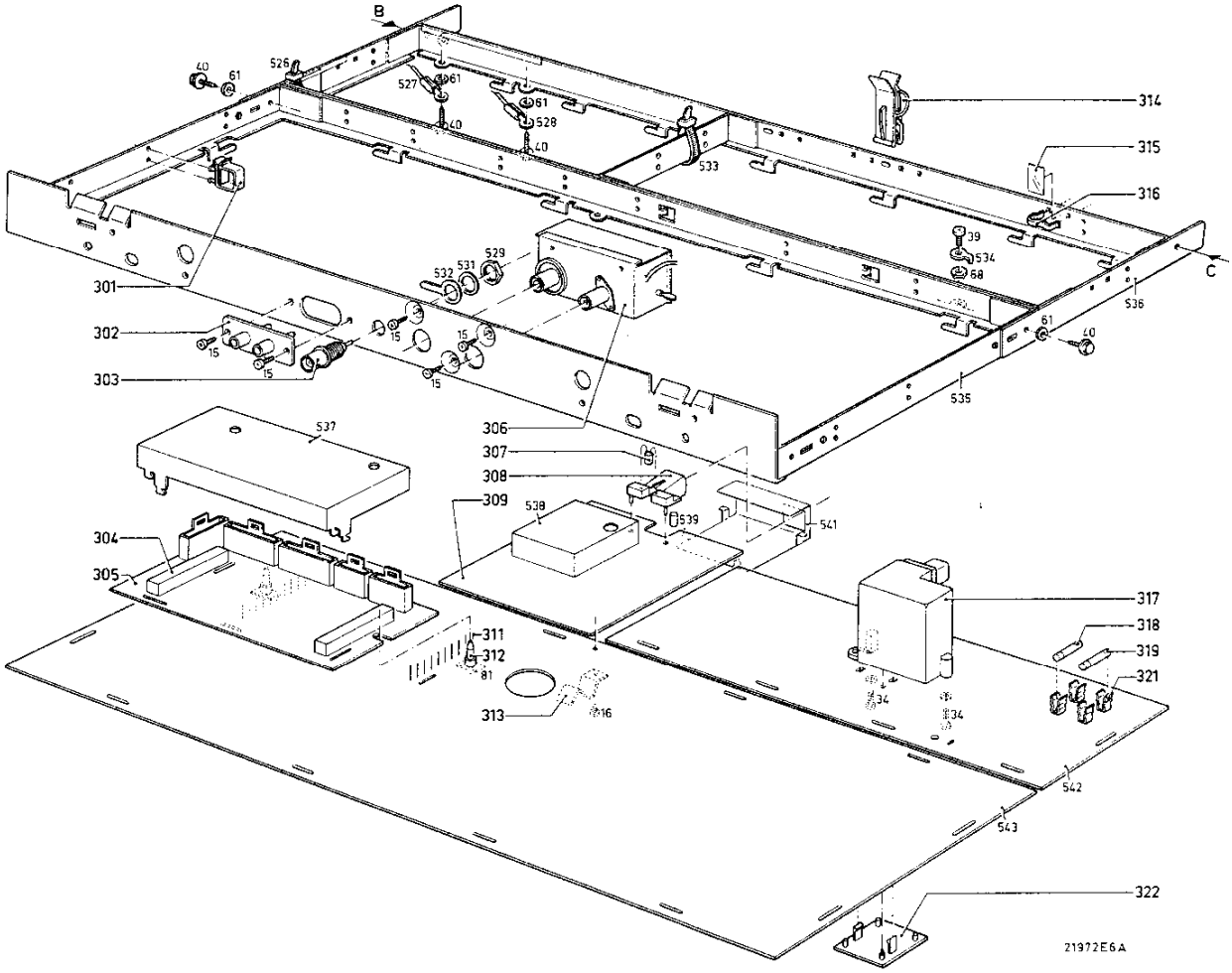

CS 78 316

T

EXPLODED VIEW SLIDE (Upto change code of slide: A11)

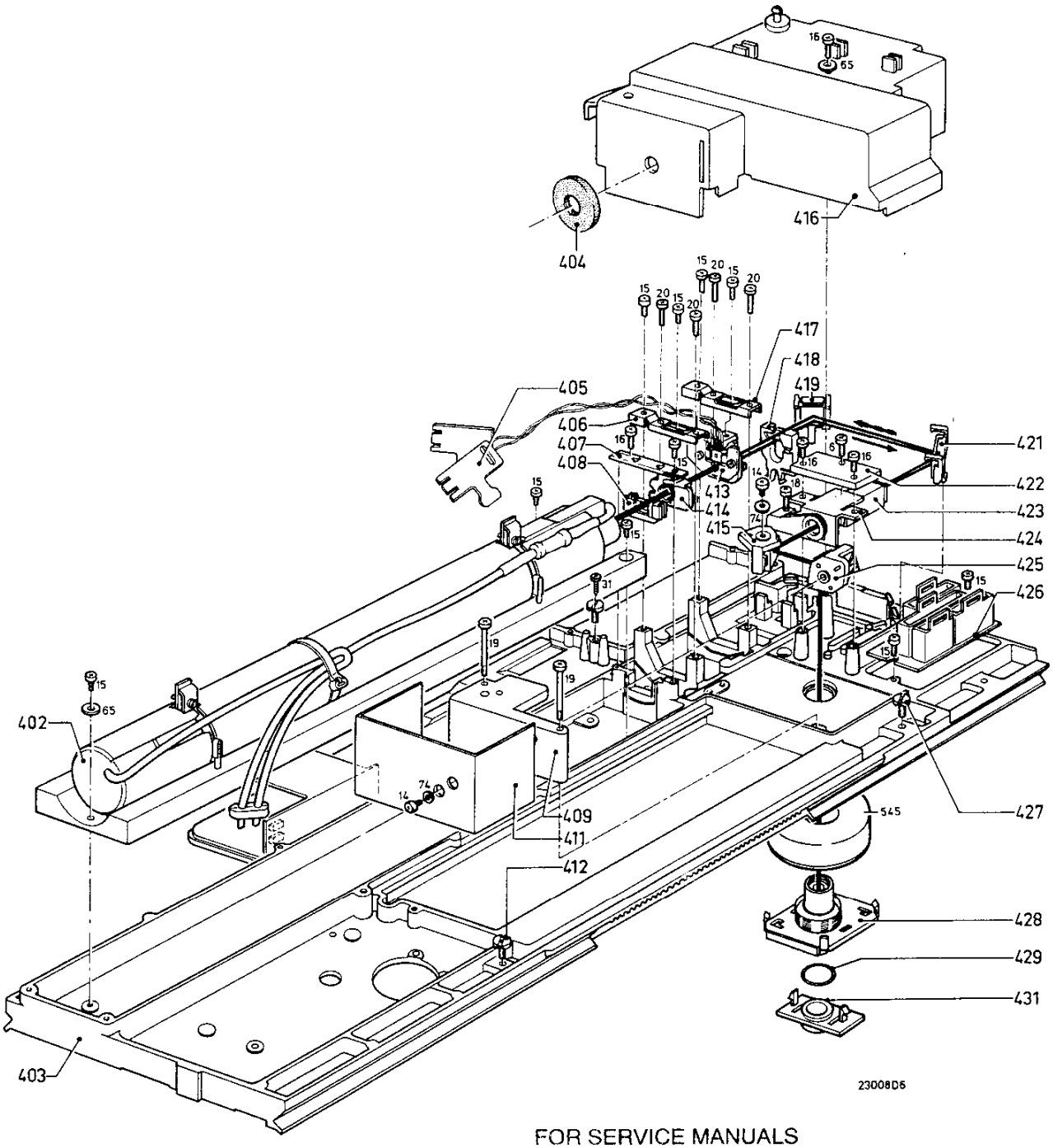

FOR SERVICE MANUALS
CONTACT:

MAURITRON TECHNICAL SERVICES

www.mauritron.co.uk
TEL: 01844 - 351694
FAX: 01844 - 352554

EXPLODED VIEW SLIDE (From change code of slide: A11)

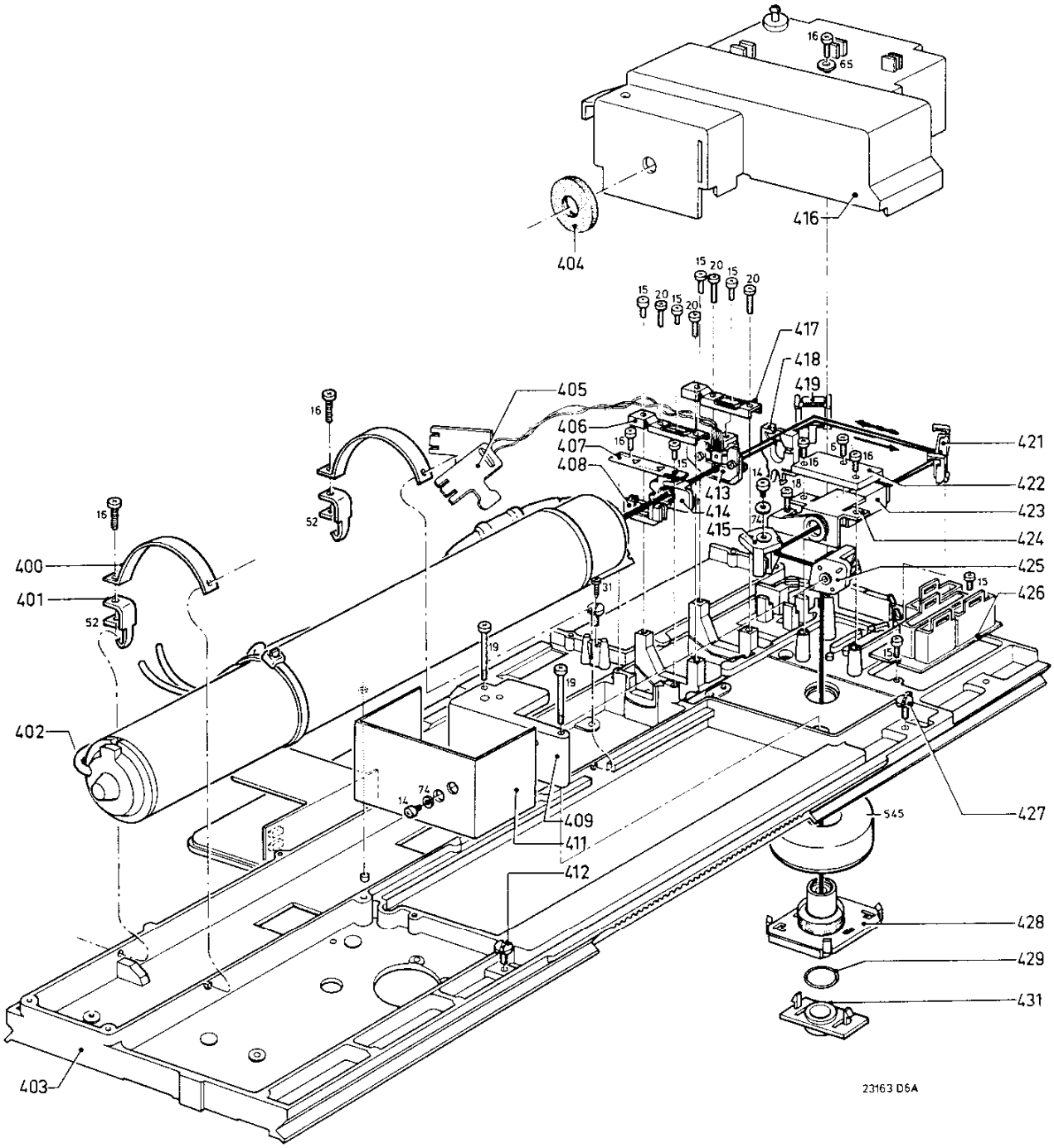

LID RELEASING

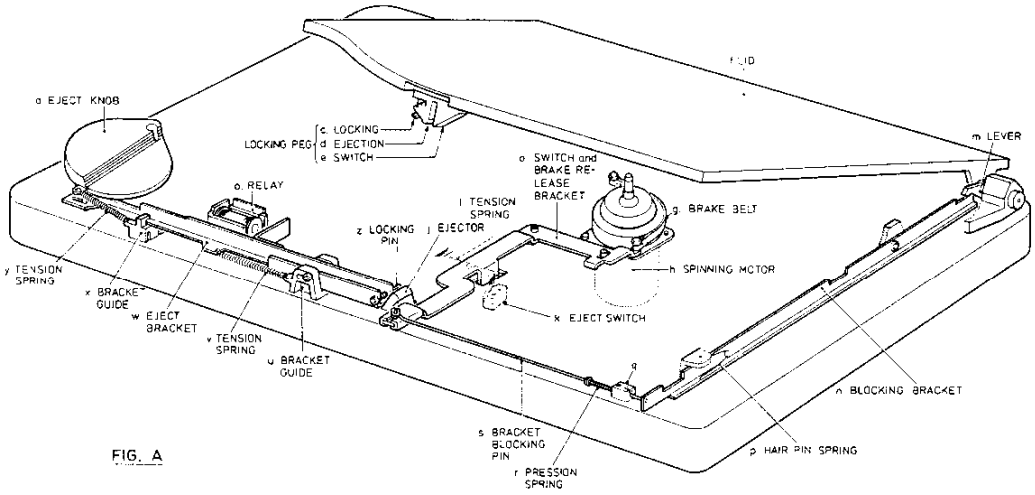

FIG. A

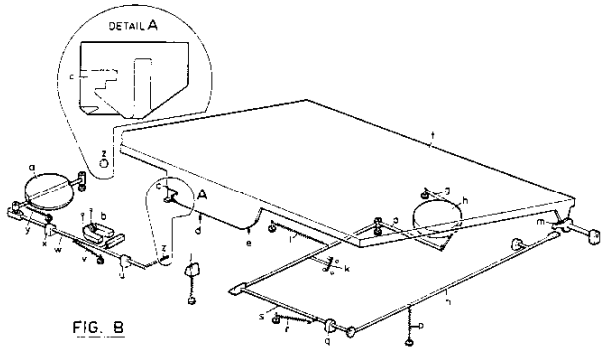

FIG. B

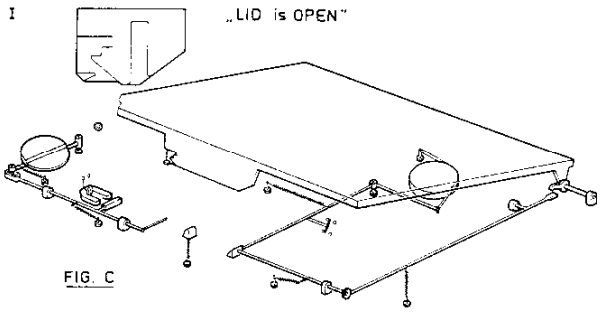

FIG. C

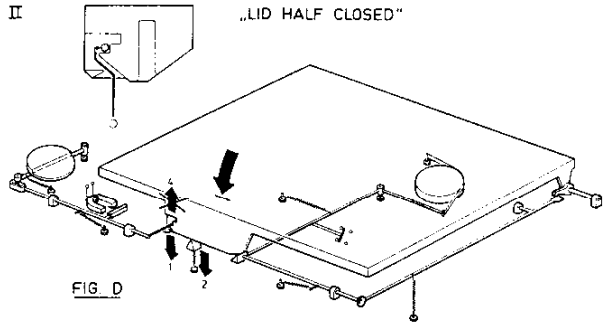

FIG. D

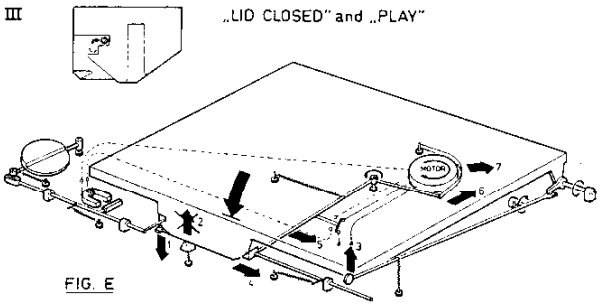

FIG. E

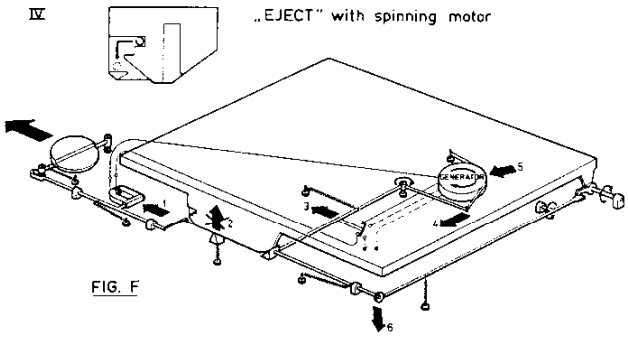

FIG. F

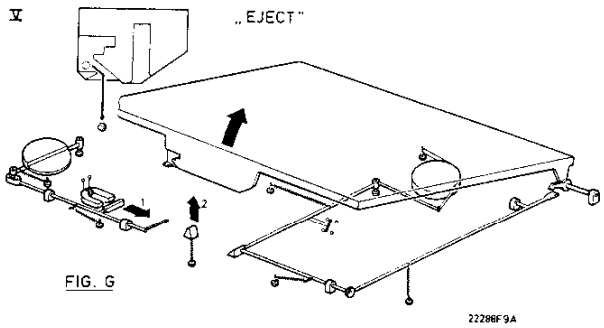

FIG. G

22288F9A

CS 78 317

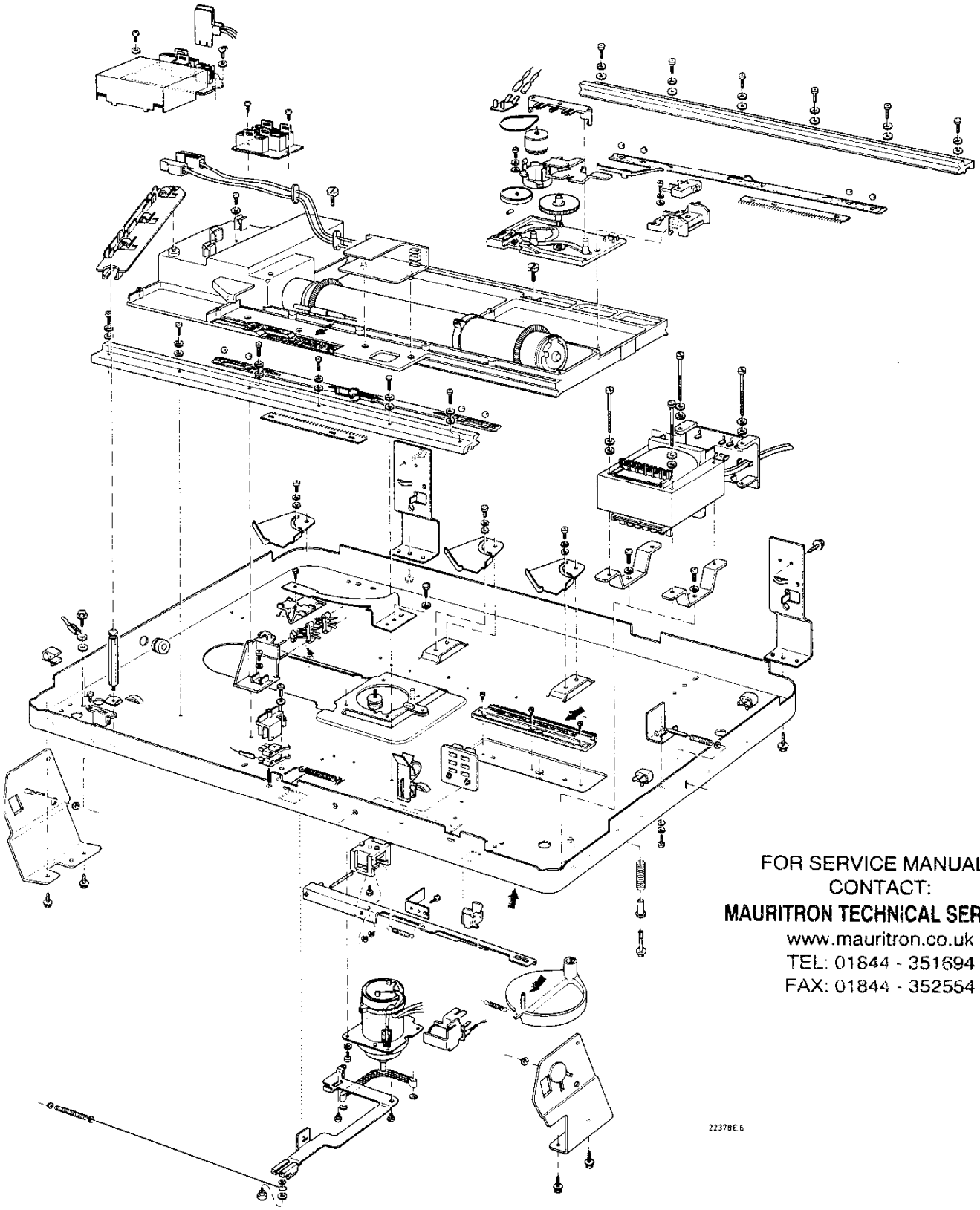

FOR SERVICE MANUALS
CONTACT:
MAURITRON TECHNICAL SERVICES
www.mauritron.co.uk
TEL: 01844 - 351694
FAX: 01844 - 352554

T

LUBRICATION INSTRUCTIONS

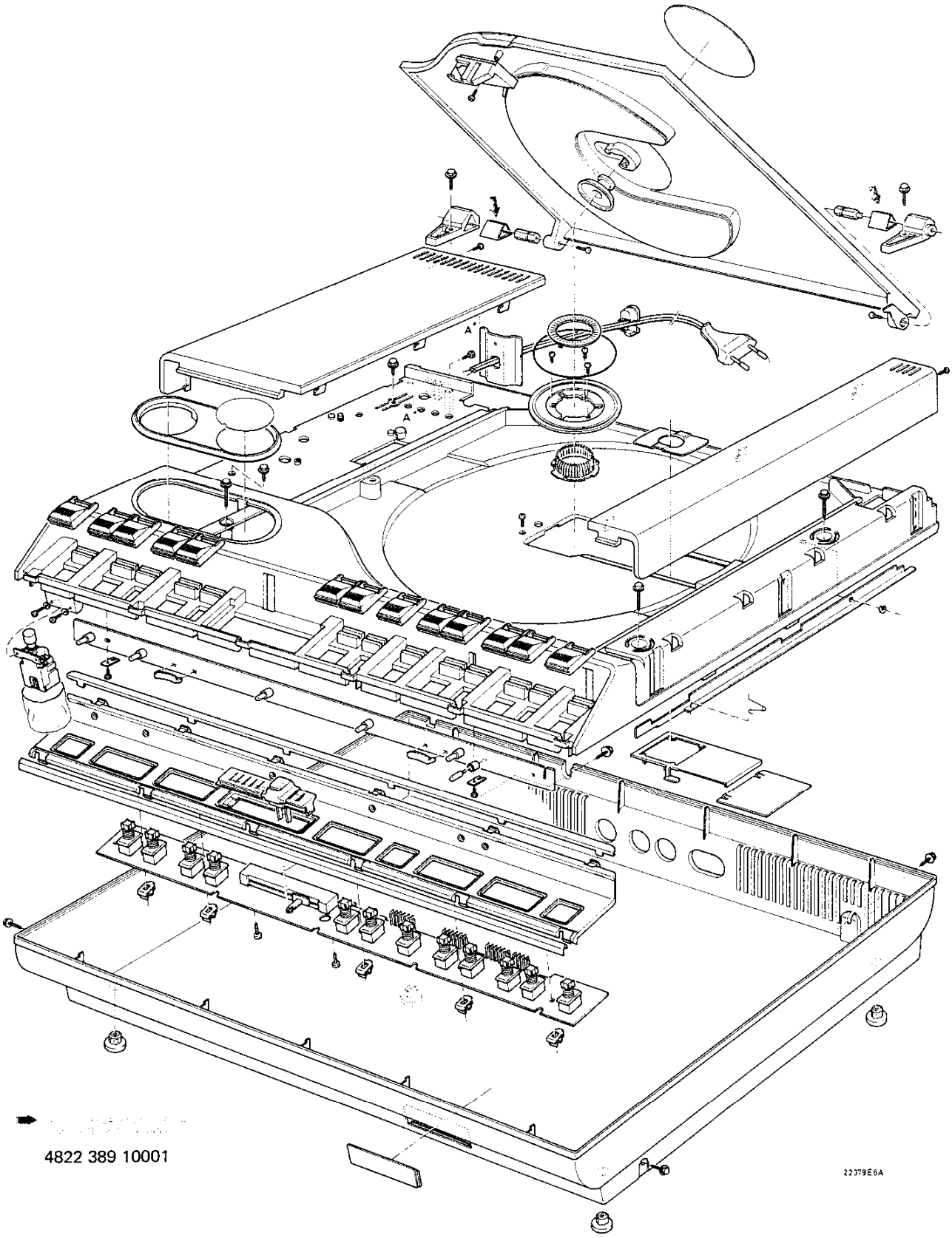

T

REMOTE CONTROL TRANSMITTER

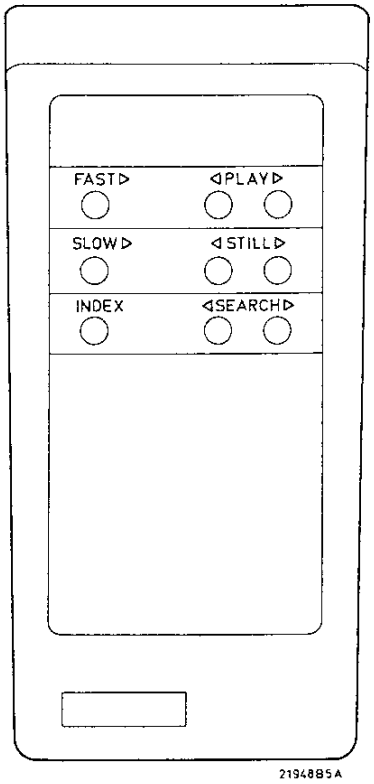

EXPLODED VIEW

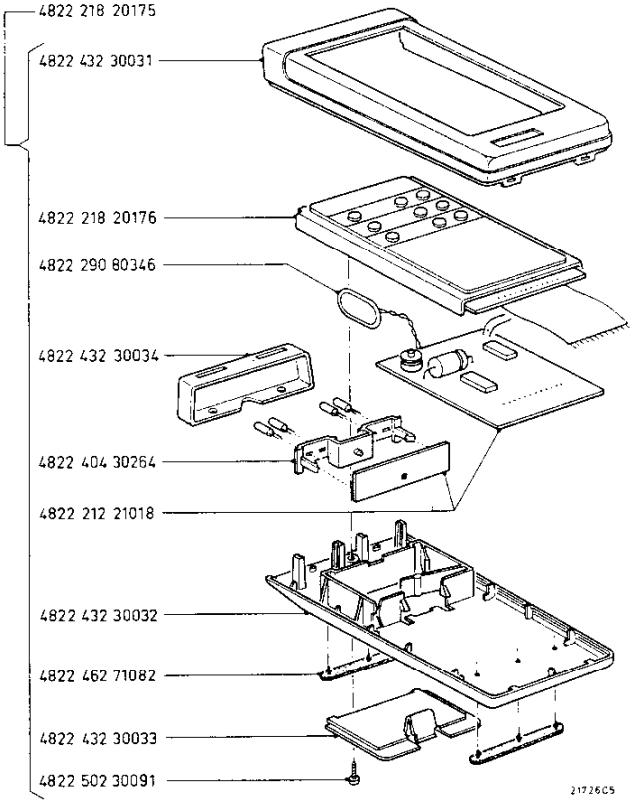

FOR SERVICE MANUALS
CONTACT:

MAURITRON TECHNICAL SERVICES

www.mauritron.co.uk
TEL: 01844 - 351694
FAX: 01844 - 352554

9 V type 6F22HD		
HEF4011		5322 209 14046
SAF1039P		4822 209 10035
BC328		4822 130 44104
BC548		4822 130 40938
AAZ15		4822 130 30229
CQY89A-2		4822 130 31332

2006	220 μF - 16 V	4822 124 20693
2001	27 pF	4822 122 31234
2002	15 pF trimm.	4822 125 50131
2003,2004	100 pF	4822 121 50562
2005	100 nF	4822 121 40522
MR25		
3001	47 kΩ	4822 116 51295
3002	82 kΩ	4822 116 51318

REMOTE CONTROL TRANSMITTER
CIRCUIT DIAGRAM

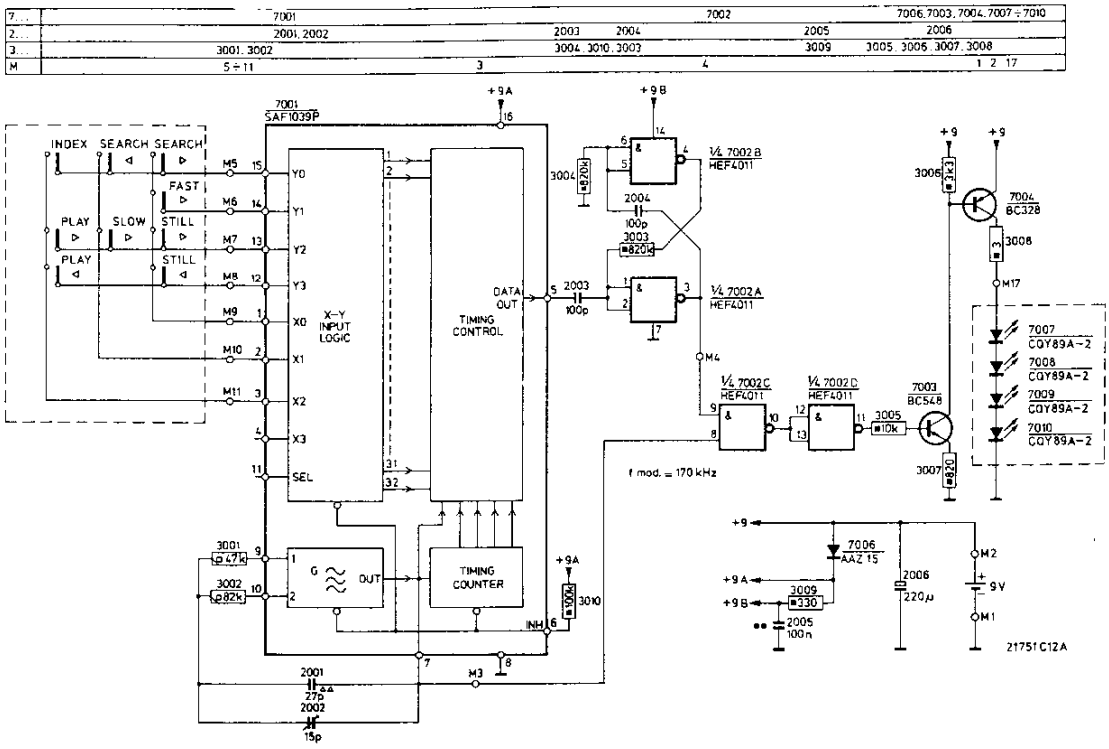

REMOTE CONTROL TRANSMITTER
WIRING DIAGRAM

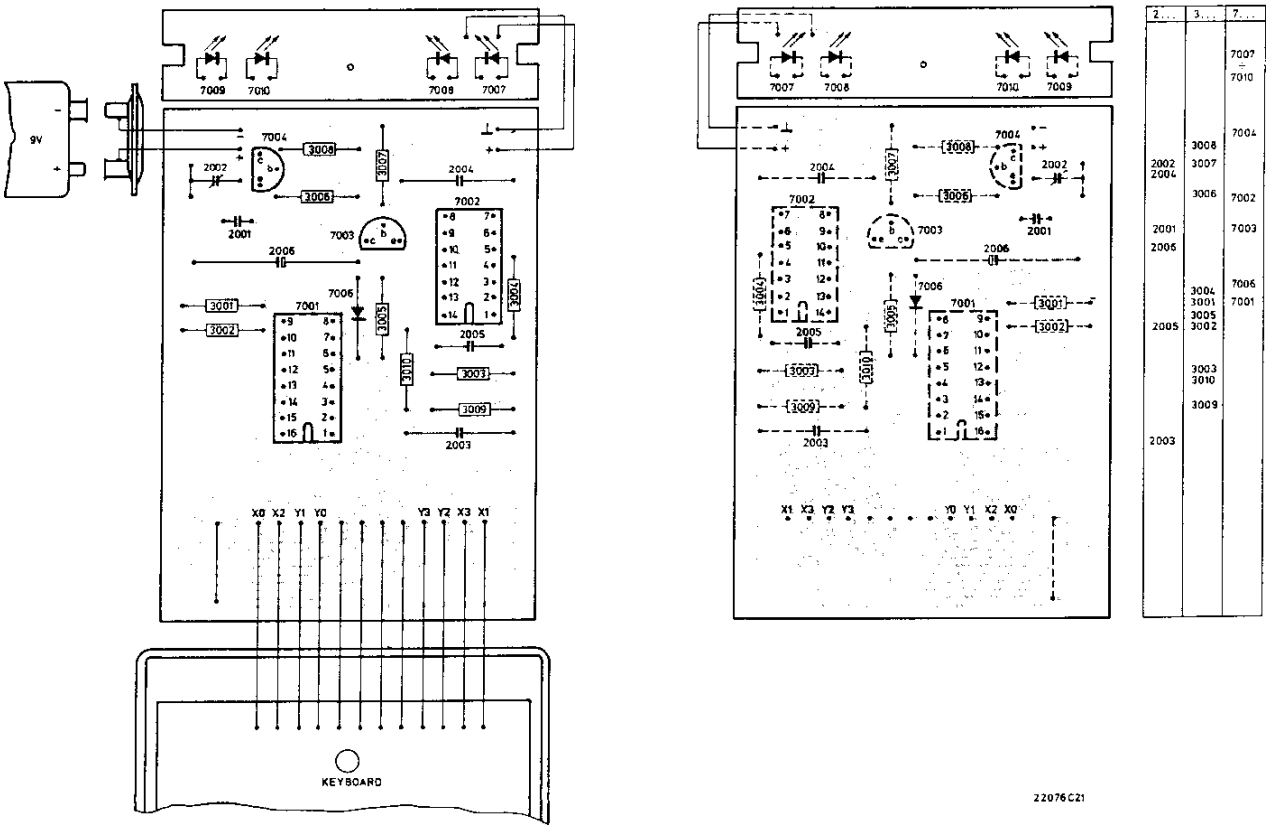

CS 78 319

REMOTE CONTROL RECEIVER CIRCUIT DIAGRAM

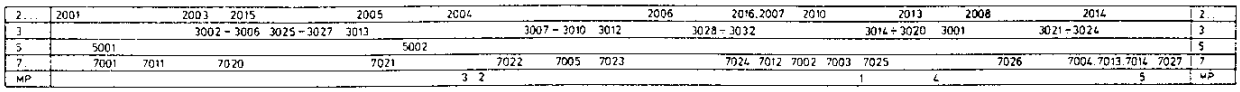

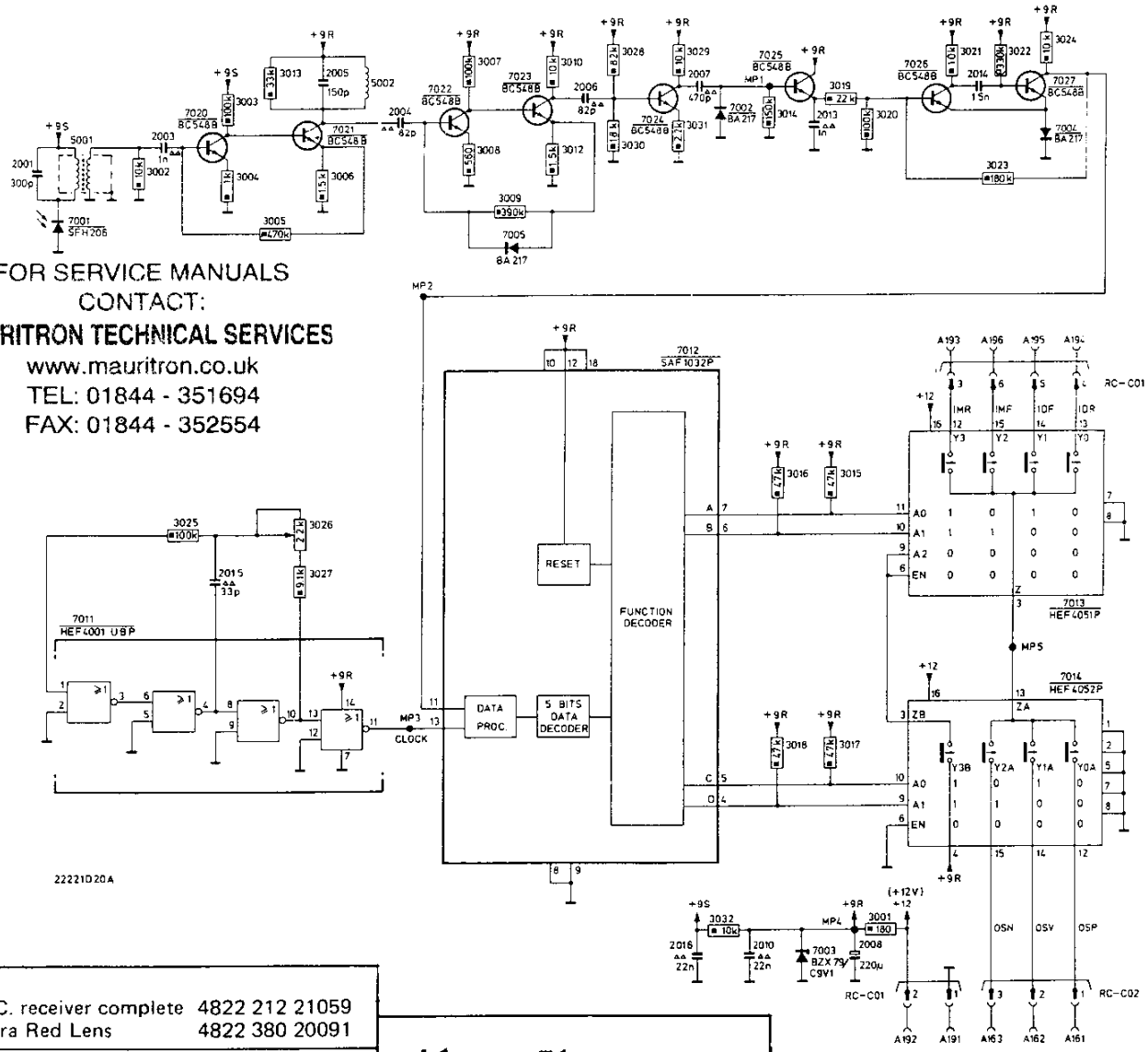

FOR SERVICE MANUALS
CONTACT:

MAURITRON TECHNICAL SERVICES

www.mauritron.co.uk
TEL: 01844 - 351694
FAX: 01844 - 352554

R.C. receiver complete		4822 212 21059
Infra Red Lens		4822 380 20091
RC-C01	6p.	4822 265 30117
RC-C02	3p.	4822 265 30121
HEF4001UBP		4822 209 10118
HEF4051P		5322 209 14212
HEF4052P		5322 209 14233
SAF1032P		4822 209 10008
BC548B		4822 130 40937
SFH206		4822 130 31409

BA217		4822 130 30703
BA317		4822 130 30847
BZX79/C9V1		4822 130 30862
5001		4822 156 20918
5002		4822 158 10386
3026	2.2 kΩ	4822 100 10029
MR25		
3022	330 kΩ	4822 116 51207

2008	220 µF - 16 V	4822 124 20693
2001	300 pF	4822 121 50086
2003,2013	1 nF	4822 122 31175
2004,2006	82 pF	4822 122 31505
2005	150 pF	4822 121 50416
2007	470 pF	4822 122 31177
2010, 2016	22 nF	4822 122 30103
2014	1.5 nF	4822 121 50432
2015	33 pF	5322 122 34139

CS 78 320

REMOTE CONTROL RECEIVER PRINTED BOARD

MISC.	2..	3...	7...
			7001
	2001		
	2015	3027	
	2016	3002	
	2010	÷	7011
5001		3006	
		3026	
		3025	
	2003		7020
			7021
		3032	
	2005		7012
		3024	
		3013	
		3022	
		3008	
5002	2004	3009	7005
		3012	
		3023	
		3015	7027
		÷	7022
		3018	÷
		3007	7024
		3031	
	2014	3010	
		3014	7002
		3019	
		÷	7013
	2006	3021	7014
		3028	7025
	2007	÷	7026
		3030	7004
	2013		
		3001	
	2008		
			7003
C01			
C02			

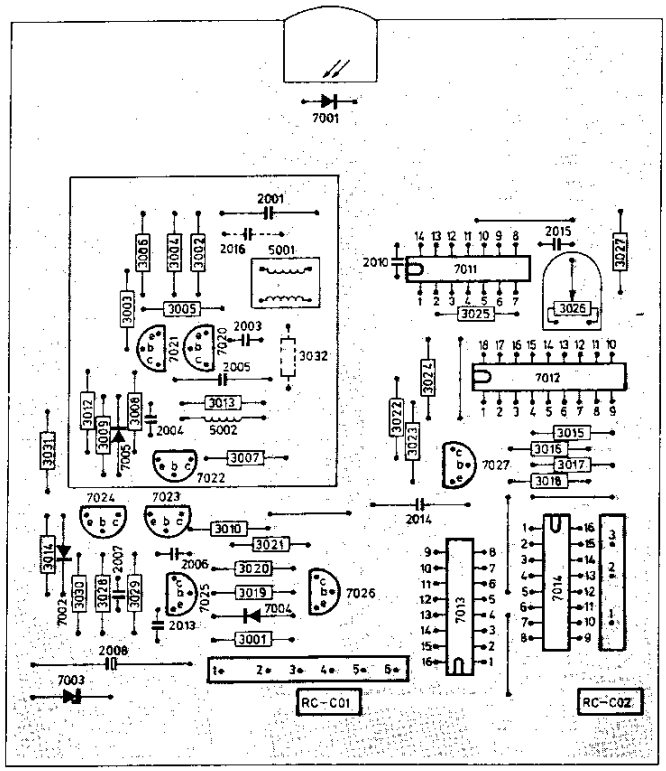

21773D21A

MISC.	2..	3...	7...
			7001
	2001		
	2015	3027	
	2016	3002	
	2010	÷	7011
5001		3006	
		3026	
		3025	
	2003		
		3032	7020
	2005		7021
		3007	7012
		3012	7005
		3013	
		3008	
5002	2004	3009	7027
		3022	7022
		÷	
		3024	
	2014	3015	7023
		÷	7024
		3018	
		3031	
		3010	
	2006	3021	
		3014	
	2007	3020	7025
		3019	7026
		3028	7014
		÷	7004
	2013	3030	7013
	2008	3001	7002
			7003
C01			
C02			

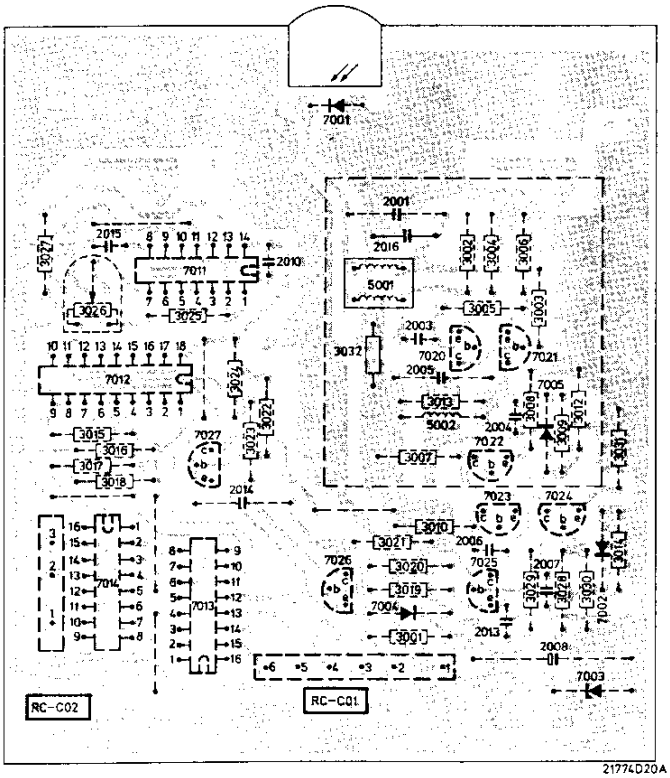

21774D20A

CONNECTIONS OF SEMICONDUCTORS

BOTTOM VIEW

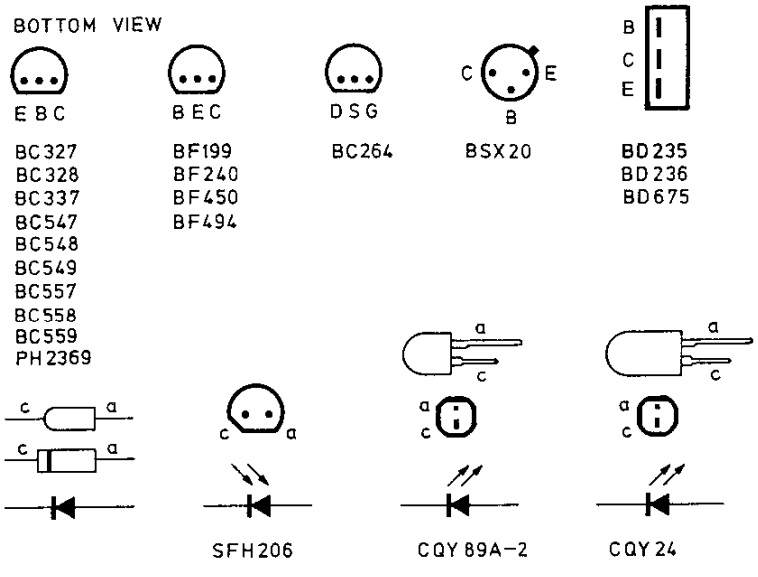

BC327 BC328 BC337 BC547 BC548 BC549 BC557 BC558 BC559 PH2369	BF199 BF240 BF450 BF494	BC264	BSX20	BD235 BD236 BD675

FOR SERVICE MANUALS
CONTACT:
MAURITRON TECHNICAL SERVICES
www.mauritron.co.uk
TEL: 01844 - 351694
FAX: 01844 - 352554

SURVEY OF SYMBOLS

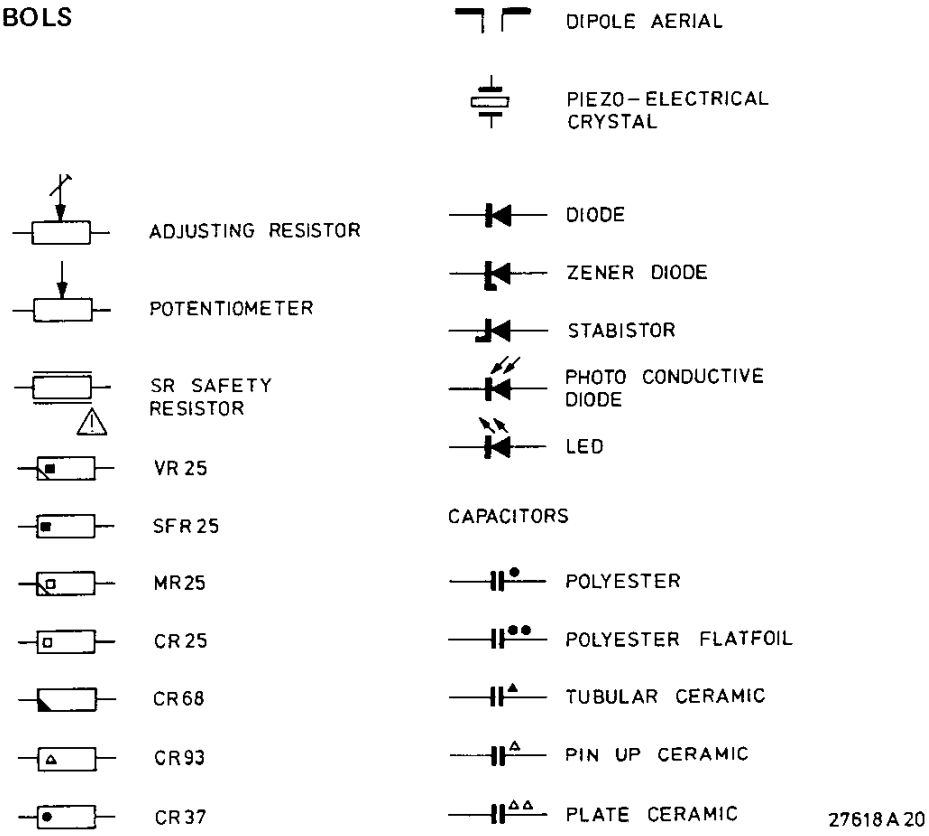

27618A20

SURVEY OF SYMBOLS

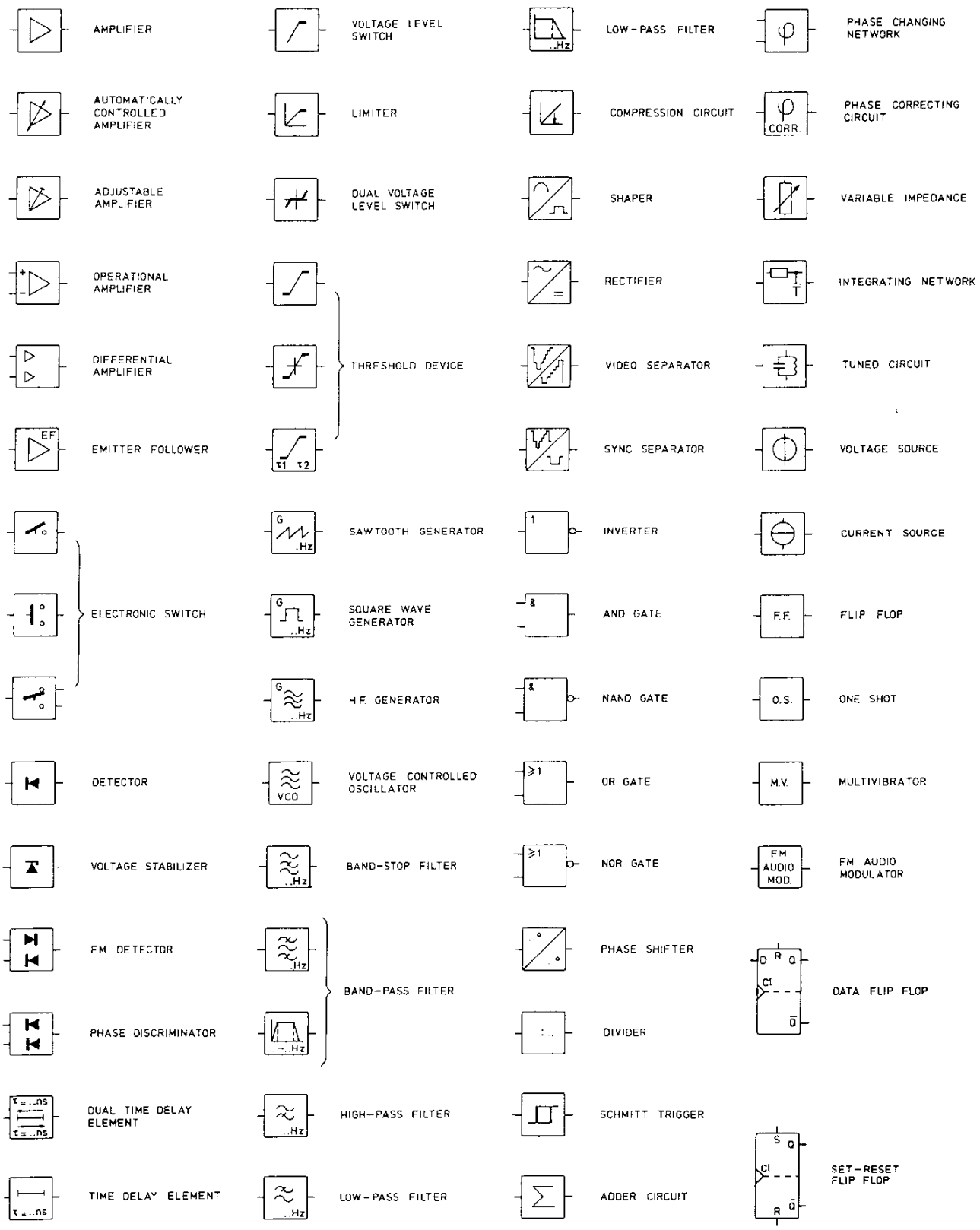

ABBREVIATIONS IN THE CIRCUIT DIAGRAMS

BP = Burst PAL

CAV = Constant angular velocity
CHL = Channel left
CHR = Channel right
CLV = Constant linear velocity
CP = Course pulse
CR = Clipped radial
CV = Clipped video

F = Fast
FF = Fast forward

H = Horizontal

I = Input
Id = Identification
ICR = Input clipped radial
ICV = Input clipped video
IDF = Input double forward
IDR = Input double reverse
IGR = Input general reset
ILP = Input line pulse
IMC = Input master clock
IMD = Input mode double (IMF + IMR)
IMF = Input mode forward
IMR = Input mode reverse
IRP = Input raster pulse
ISV = Input slow motion variable

LD = Level detection
LP = Line pulse
LPO = Line pulse out
LV = Laser vision

MP = Measuring point
MTF = Motional transfer function

N.A. = Numerical aperture
NP = Normal play
NPF = Normal play forward
NPR = Normal play reverse
NS = Normal speed
NTSC = National television system committee

O = Output
OBP = Output burst PAL
OBS = Output burst switch PAL/NTSC
OCL = Output channel left
OCP = Output course pulse
OCR = Output channel right
OLS = Output radial loop switch
OMU = Output video mute
OSM = Output slide motor
OSN = Output speed normal
OSP = Output still picture
OSV = Output slow motion variable
OVI = Output video index

PAL = Phase alternating line

R = Reverse
RC = Remote control
RCR = Remote control receiver
RCT = Remote control transmitter
RP = Frame pulse

SF = Search forward
SM = Slow motion
SMF = Slow motion forward
SMR = Slow motion reverse
SP = Still picture
SPF = Still picture forward
SPR = Still picture reverse
SR = Search reverse
SV = Slow variable

TP = Test point

V = Vertical
VCO = Voltage controlled oscillator
VDD = Supply voltage
VDP = Video disc player
VLP = Video long player
VP = Video player
VSS = Ground

FOR SERVICE MANUALS
CONTACT:
MAURITRON TECHNICAL SERVICES
www.mauritron.co.uk
TEL: 01844 - 351694
FAX: 01844 - 352554

VIDEO DISC 12"

DIAMETERS

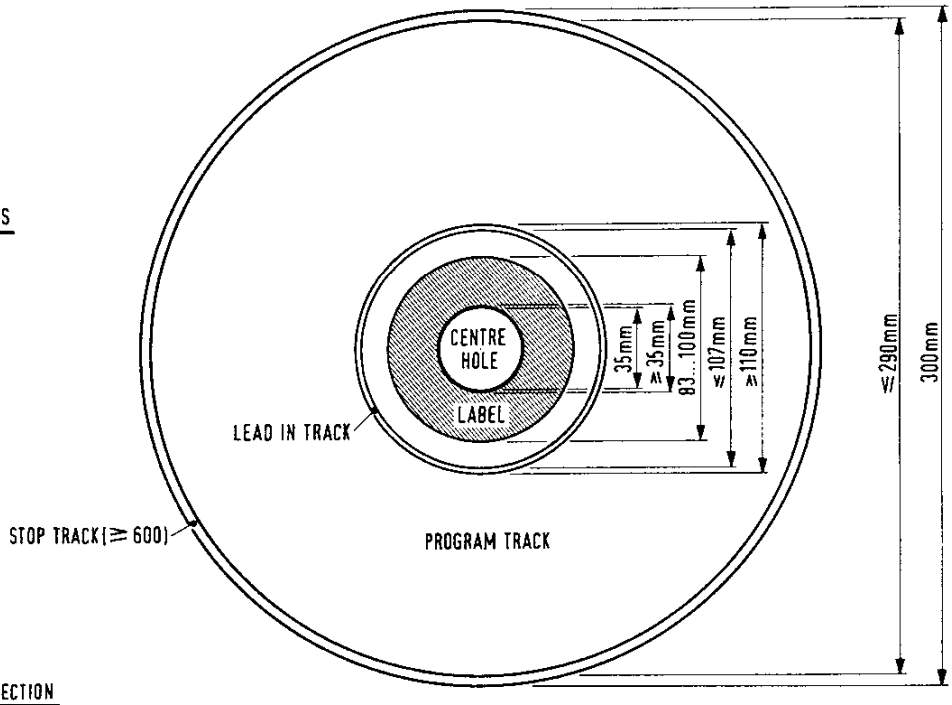

CROSS SECTION

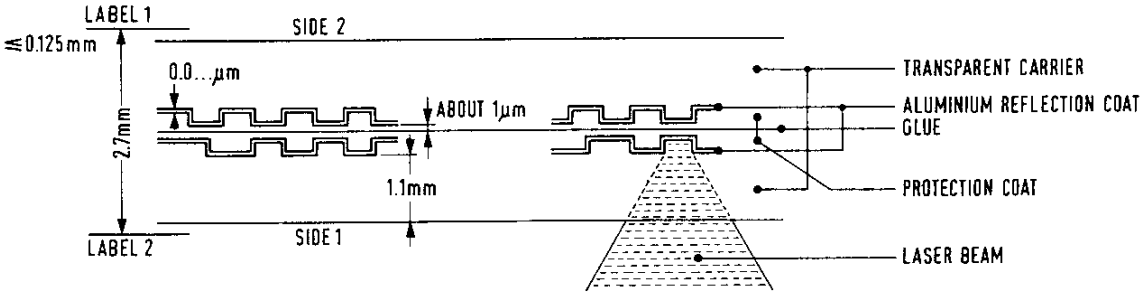

TRACK OF PITS

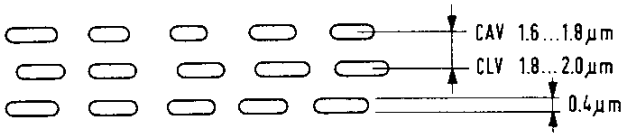

PITS

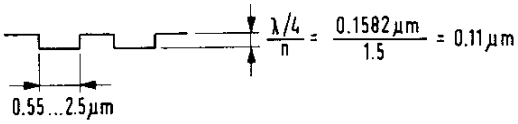

LENGTH OF THE PIT IS DEPENDENT ON THE DIAMETER OF THE TURN AND ON THE DUTY CYCLE

	C.A.V. = CONSTANT ANGULAR VELOCITY	C.L.V. = CONSTANT LINEAR VELOCITY
MAX. PLAYING TIME (IN MINUTES) PER SIDE	36	54
NUMBER OF REVOLUTIONS PER MINUTE	1500	1500 ...565

20852 C A 6

LIST OF MECHANICAL PARTS

Fixing material

1	4822 502 11061	Screw M2x10
2	4822 502 11176	Screw M2x12
3	4822 502 11112	Screw M3x3
4	4822 502 10558	Screw M3x5
5	4822 502 11053	Screw M3x8
6	4822 502 10174	Screw M3x8
7	4822 502 11151	Screw M3x12
8	4822 502 10051	Screw M4x20
11	4822 502 11468	Pan screw M2x4
12	4822 502 11469	Pan screw M2.5x5
13	4822 502 11471	Pan screw M2.5x8
14	4822 502 11467	Pan screw M2.5x10
15	4822 502 11472	Pan screw M3x5
16	4822 502 11473	Pan screw M3x8
17	4822 502 11474	Pan screw M3x10
18	4822 502 11475	Pan screw M3x16
19	4822 502 11476	Pan screw M3x30
20	4822 502 11481	Pan screw M4x8
21	4822 502 11477	Pan screw M4x40
22	4822 502 11478	Pan screw M4x45
31	4822 502 30191	Pan tap screw 2Nx8
32	4822 502 30208	Pan tap screw 2Nx16
33	4822 502 30188	Pan tap screw 4Nx9.5
34	4822 502 30209	Pan tap screw 3Nx9.5
35	4822 502 30211	Pan tap screw 4Nx6.5
36	4822 502 30001	Pan tap screw 4Nx8
37	4822 502 30212	Pan tap screw 4Nx9.5
38	4822 502 30219	Pan tap screw 4Nx9.5
39	4822 502 30062	Pan tap screw 6Nx6.5
40	4822 502 30213	Pan tap screw 6Nx9.5
41	4822 502 30214	Pan tap screw 6Nx13
42	4822 502 30216	Pan tap screw 6Nx13
43	4822 502 30215	Pan tap screw 6Nx22
44	4822 502 30091	Pan tap screw 4Nx13
51	4822 505 10405	Nut M2
52	4822 505 10029	Nut M3
61	5322 532 14486	Washer 2.2x5
62	5322 532 14464	Washer 2.7x6.5
63	4822 532 10769	Washer 2.7x8
64	5322 532 14493	Washer 3.2x6
65	4822 532 10332	Washer 3.2x7
66	4822 532 10582	Washer 3.2x9
68	5322 532 14174	Washer 4.3x8
69	4822 532 10333	Washer 4.3x9
70	4822 532 10847	Washer 2.7x6.5
71	4822 530 70122	Retaining ring 1.9
72	4822 530 70043	Retaining ring 2.3
73	4822 530 80162	Lock washer 2.2
74	4822 530 80168	Lock washer 2.6
75	4822 530 80142	Lock washer 2.8
76	4822 530 80173	Lock washer 3.1
78	4822 530 80163	Lock washer 4.1
79	5322 530 84103	Lock washer 4.2
81	4822 530 70296	Locking plate
82	4822 466 80748	Locking plate
83	4822 492 62312	Locking plate

Remarks:

1) in /50- and /65- versions torx screws have been used.

*) See also list of electrical parts.

Cabinet

101	4822 444 60373	Cap (R.C.)
101	4822 444 60375	Cap
102	4822 454 30296	Ornamental disc
103	4822 426 40211	Eject housing
104	4822 444 30303	Upper casing
105	4822 410 22478	Key
106	4822 410 22476	Key
107	4822 460 20267	Ornamental strip
108	4822 276 10857	*Mainsswitch
109	4822 454 30299	Ornamental plate
111	4822 460 20268	Ornamental strip
112	4822 276 10856	*Mode-switch
113	4822 444 50272	Lower casing
114	4822 462 40414	Foot
115	4822 460 20266	Ornamental disc
116	4822 444 20246	Cover
117	4822 402 60761	Locking peg
118	4822 535 80621	Pivot
119	4822 492 62309	Flat spring
121	4822 466 90935	Hinge block
122	4822 444 30302	Cover assembly
123	4822 255 40202	LED-holder
124	4822 401 10627	Clamp
125	4822 130 31314	*LED
126	4822 410 22477	Knob
127	4822 454 30298	Strip
128	4822 105 10414	*Slow-motion-potentiometer
129	4822 381 20051	Prism
130	4822 404 30451	Clamping unit
131	4822 532 51175	Ornamental ring
132	5322 325 64083	Cord-clamp
133	4822 321 10074	*Mains cord (/00/50)
133	4822 321 10246	*Mains cord (/15/65)
134	4822 530 50568	"O"-ring
135	4822 532 10846	Turntable ring
136	4822 460 20269	Decorative plate
137	4822 532 60735	Centring ring
138	4822 535 80621	Pivot
139	4822 492 62309	Flat spring
141	4822 466 90936	Hinge block
142	4822 444 60374	Cap
143	4822 402 50159	Bracket
144	4822 492 40895	Spring
145	4822 444 60369	Slot cover
146	4822 444 60371	Slot cover

Chassis

200	4822 466 10308	*Connector of photo diodes
201	4822 212 21058	*Pre-amplifier
202	4822 214 50232	*Slide panel
203	4822 268 40098	*Anode-connector-housing
204	4822 268 40099	*Cathode-connector-housing
205	4822 268 20079	*Laser connector
206	4822 466 90942	Cable guide plate
208	4822 462 30195	Guide strip
209	4822 535 80622	Pivot-support
211	5322 401 14224	Cable clamp
212	4822 522 20211	Rack
213	4822 466 80747	Pressure plate
214	4822 492 62307	Flat spring

215	4822 466 90939	Boss
216	4822 271 30255	* Slide position switch
217	4822 325 60198	Grommet
218	4822 276 10858	Mounting bracket with switches
219	4822 532 10845	Retaining ring
221	4822 466 90934	Guide block
222	4822 466 90944	Mounting plate
223	4822 271 30256	* Lid switch
224	4822 492 31736	Spring
225	4822 466 90937	Guide block
226	4822 535 91177	Pin
227	4822 404 30452	Unlocking strip
228	4822 492 31735	Spring
229	4822 361 20201	* Turntable motor
231	4822 492 51335	Spring
232	4822 502 11463	Pivot-screw
233	4822 402 30112	Brake bracket
234	4822 466 90941	Projection
235	4822 535 91176	Spindle
236	4822 502 11465	Screw
237	4822 401 10724	Cable clamp
238	4822 691 30092	Slide drive assembly
239	4822 401 10722	Cable clamp
241	4822 466 10309	* Slide-motor-panel
242	4822 466 90943	Strip
243	4822 358 20126	Belt
244	4822 361 20202	* Slide-drive-motor
245	4822 256 90316	Holder
246	4822 528 40218	Pulley
247	4822 522 31323	Gear wheel
248	4822 464 50145	Plate
249	4822 401 10723	Cable guide
250	4822 401 10722	Cable clamp
251	4822 522 31322	Gear wheel
252	4822 520 40133	Ball
253	4822 466 80751	Bearing strip
254	4822 466 80747	Pressure plate
255	4822 466 80747	Pressure plate
256	4822 502 11466	Screw
257	4822 522 20212	Rack
258	4822 401 10721	Cable guide
259	4822 401 10654	Clamp
261	4822 402 60758	Bracket
262	4822 466 90938	Guide block
263	4822 492 31735	Spring
264	4822 280 60441	* Relay
265	4822 321 30225	Belt brake assembly
266	4822 502 11463	Pivot screw
267	4822 462 30195	Guide strip
268	4822 492 62311	Flat spring
269	4822 520 40133	Ball
271	4822 522 31322	Gear wheel
272	4822 466 80751	Bearing strip
273	4822 271 30257	* Slide-end-stop-switch
274	4822 522 20211	Rack
275	4822 404 60134	Switch-holder
276	4822 454 30297	Guide plate
277	4822 145 30231	* Mainstransformer
278	5322 401 14224	Cable clamp
279	4822 404 60145	Bracket
281	4822 492 51341	Spring
282	5322 401 14224	Cable clamp
283	4822 492 51341	Spring
284	4822 532 20728	Bush assembly
285	4822 502 11482	Transport screw
286	4822 411 60728	Knob

Printed boards assembly

301	4822 401 10725	Cable guide
302	4822 267 20191	* Audio output
303	4822 267 10072	* Video output
304	4822 267 50211	* Connector 10-p
305	4822 212 21057	* Mode-control-module
306	4822 216 90483	* Antenna-switch unit
307	4822 130 31409	* R.C.-photo diode
308	4822 380 20091	Infra-red-lens
309	4822 212 21059	* R.C.-receiver panel
311	5322 264 54016	* Connector 10-p
312	4822 535 91178	Guiding pin
313	4822 401 10727	Cable clamp
314	4822 401 10654	Clamp
315	4822 255 40133	Insulating plate
316	4822 255 40128	Spring clip
317	4822 214 50231	* Multiplier
318	4822 253 30027	* Fuse
319	4822 253 30027	* Fuse
321	4822 492 60063	Fuseholder
322	4822 466 90945	Insulating plate

Slide

400	4822 492 62366	Fixing spring (from change code slide A11)
401	4822 403 30335	Fixing hook (from change code slide A11)
402	4822 218 30163	* Laser assembly (upto change code slide A11)
402	4822 218 30162	* Laser assembly (from change code slide A11)
404	4822 532 51176	Dust ring
405	4822 466 10308	* Connector
406	4822 492 62308	Bracket
407	4822 492 62352	Bracket
408	4822 381 20052	Grating assembly
409	4822 218 30158	Tilting mirror assembly
411	4822 462 50209	Bracket
412	4822 401 10722	Cable clamp
413	4822 255 40203	* Photo diode assembly
414	4822 256 80038	Spot lens assembly
415	4822 218 30161	* Radial mirror assembly
416	4822 444 60372	Dust cover
417	4822 492 62308	Bracket
418	4822 256 90317	Cylinder lens assembly
419	4822 256 80037	Folding mirror assembly
421	4822 256 80037	Folding mirror assembly
422	4822 466 80749	Bracket for λ/4 plate
423	4822 381 20049	Wollaston prism assembly
424	4822 256 90318	λ/4 plate assembly
425	4822 218 30159	* Tangential mirror assembly
426	4822 214 50232	Slide panel assembly
427	4822 401 10722	Cable clamp
428	4822 381 20053	* Objective assembly
429	4822 530 50567	"O"-ring
430	4822 462 40413	Objective-dust cover
	4822 492 51337	Spring of λ/4 plate

SERVICE AIDS

4822 389 10001	Lubrication Alvania II
4822 397 30055	Test disc
4822 395 30105	Optical alignment set complete
4822 395 50145	Set with torx-screw-driving-tools

LIST OF ELECTRICAL PARTS

C.U.'s and Modules

U1000	Pre-amplifier	4822 212 21058
U1001	H.F.-processor	4822 212 21035
U1002	Drop-out detector	4822 212 21036
U1003	Video demodulator 1	4822 212 21037
U1004	Video demodulator 2	4822 212 21038
U1005	Luminance separator	4822 212 21039
U1006	Mixer switch	4822 212 21041
U1007	Subcarrier regenerator	4822 212 21042
U1008	Video processor	4822 212 21043
U1009	Sound demodulator 1	4822 212 21044
U1010	Sound demodulator 2	4822 212 21045
U1011	Colour separator	4822 212 21046
U1012	Reference control	4822 212 21047
U1013	Sample detector	4822 212 21048
U1014	Tangential phase detector	4822 212 21049
U1015	Search adapter	4822 212 21051
U1016	Focus drive	4822 212 21052
U1017	Radial drive	4822 212 21053
U1018	Slide drive	4822 212 21054
U1019	Tangential drive	4822 212 21055
U1020	Sequence logic	4822 212 21056
U1021	Mode control module	4822 212 21057
U1022	Antenna switch	4822 216 90507
U1023	UHF-Modulator (/00/50)	4822 210 20298
U1023	UHF-Modulator (/15/65)	4822 210 20307
R.C.-R	Remote control receiver (RC-R)	4822 212 21059
R.C.-T.	Remote control transmitter (RC-T)	4822 218 20175
	Slide drive motor printed board	4822 466 10309
	Slide connections printed board	4822 214 50232

Cables

	UHF-cable	4822 321 20352
	Mains cord (/00/50)	4822 321 10074
	Mains cord (/15/65)	4822 321 10246
	Audio cable 2p. cinch-2p. cinch	4822 321 20308
	Audio cable 2p. cinch-5p. DIN	4822 321 20298

Laser

	Laser (in players upto change-code slide A11)	4822 218 30163
	Laser (in players from change-code slide A11)	4822 218 30162

M1	Turntable motor	4822 361 20201
M2	Slide drive motor	4822 361 20202

F1	Temp. fuse in mains-transformer	4822 252 20017

T1	Mains transformer	4822 145 30231

	Relay	4822 280 60441
	Objective assembly	4822 381 20053
	Radial mirror	4822 218 30161
	Tangential mirror	4822 218 30159

S1	Mains switch	4822 276 10857
	Mode switch	4822 276 10856
	Lid switch	4822 271 30256
	Slide position switch	4822 271 30255
	Slide-end-stop switch	4822 271 30257

	Photo diode assembly	4822 255 40203
	SFH206 (RCR)	4822 130 31409

	CQY24 (LED-panel)	4822 130 31314
	CQY89A-2 (RCT)	4822 130 31332

	AAZ15	4822 130 30229
	BA217	4822 130 30703
	BA315	4822 130 30843
	BA317	4822 130 30847
	BAW62	4822 130 30613
	BYX55/350	4822 130 30817
	BZV38	4822 130 30947
	BZV46/C1V5	5322 130 34865
	BZX75/C1V4	4822 130 34047
	BZX75/C2V1	4822 130 34049
	BZX75/C2V8	4822 130 34048
	BZX75/C3V6	4822 130 30765
	BZX79/B4V7	4822 130 34174
	BZX79/B5V6	4822 130 34173
	BZX79/B8V2	4822 130 34382
	BZX79/B9V1	4822 130 30862
	BZX79/B10	4822 130 34297
	BZX79/C4V7	4822 130 34174
	BZX79/C5V6	4822 130 34173
	BZX79/C6V2	4822 130 34167
	BZX79/C6V8	4822 130 34278
	BZX79/C8V2	4822 130 34382
	BZX79/C9V1	4822 130 30862
	BZX79/C10	4822 130 34297
	BZX79/C12	4822 130 34197
	BZX79/C18	4822 130 31024
	C2206-B40/C3700	5322 130 34962

	4.5 MHz	4822 242 70361
	8.86 MHz	4822 242 70304

BC264A	5322 130 44476
BC264B	4822 130 41066
BC264C	5322 130 44476
BC264D	5322 130 44656
BC327	4822 130 40854
BC328	4822 130 44104
BC337	4822 130 40855
BC368	5322 130 44647
BC369	5322 130 44593
BC547	4822 130 44257
BC547B	4822 130 40959
BC547C	4822 130 44503
BC548	4822 130 40938
BC548A	4822 130 40948
BC548B	4822 130 40937
BC548C	4822 130 44196
BC549	4822 130 40964
BC549C	4822 130 44246
BC557	4822 130 44256
BC557B	4822 130 44568
BC558	4822 130 40941
BC558B	4822 130 44197
BC559	4822 130 40963
BC559B	4822 130 44358
BD235	4822 130 40918
BD236	4822 130 41026
BD675	5322 130 44604
BD681	5322 130 44786
BF199	4822 130 44154
BF240	4822 130 40902
BF410D	4822 130 41697
BF450	5322 130 44237
BF494	4822 130 44195
BSX20	5322 130 40417
PH2369	4822 130 41594

IC

HEF4001UBP (RC-R)	4822 209 10118
HEF4011 (RC-T)	5322 209 14046
HEF4013BP	5322 209 10002
HEF4051P (RC-R)	5322 209 14212
HEF4052P (RC-R)	5322 209 14233
HEF4093BP	5322 209 14186
HEF4528BP	5322 209 14191
LF356 N	5322 209 86422
LF356 T	4822 209 80798
LM311	5322 209 85503
LM393 N	4822 209 80797
MC14001 (RC-R)	5322 209 14196
MC1458V	5322 209 85512
N74121A	5322 209 84017
N74221B	5322 209 85529
NE532N	4822 209 80818
NE5534N	5322 209 86285
SA1458N	4822 209 80793
SAA1083P	4822 209 80795
SAF1032P (RC-R)	4822 209 10008
SAF1039P (RC-T)	4822 209 10035
TCA240	4822 209 80629
TCA420 A	4822 209 80278
TDA2721	4822 209 80568
TDA2730	4822 209 80565
TEA1015	4822 209 80802
UA741 CN	5322 209 85254
UA3403 PC	5322 209 86404
UAA1030	4822 209 80794

Connectors

Video output BNC	4822 267 10072
Audio output jack 2p	4822 267 20191
HF-input B&L female	4822 265 10019
HF-output B&L male	4822 265 10023

Connectors on printed boards

C.U. connector	4822 267 50189
Cover of C.U.-connector	5322 447 94231
Module connector on module 10p.	4822 267 50211
Module connector on V/S p.b. 10p	5322 264 54016
IC-holder 8p quil	4822 255 40147
2p. A01,A03,A05, A08,A25,A31, C02,C05	4822 265 20172
2p. A43,A44	4822 267 30361
3p. A02,A06,A09 A16,A30,C01, C03,RC-C02	4822 265 30121
4p. A15,A33,C06	4822 265 30119
4p. A40	4822 267 40395
5p. A32	4822 267 40247
6p. A07,A17,A18, A19,A26,C07, RC-C01	4822 265 30117
6p. A41,A42	4822 267 40394
6p. A45	4822 268 10135
6p. A27 (green)	4822 267 50308
6p. A28 (yellow)	4822 267 50212
7p. A04,C04	4822 265 40119

Connectors on cables

2p. A01,A03,A05, A08,A25,A31, C02,C05	4822 266 20073
3p. A06,A09,A30, C01	4822 266 30071
3p. A02,A16,C03, RC-C02	4822 268 40093
4p. A15,A33,C06	4822 266 30072
5p. A32	4822 266 30075
6p. A07,A17,A18, A26,C07	4822 266 30073
6p. A19,RC-C01	4822 268 40096
7p. A04,C04	4822 268 40097
Contacts in connectors	4822 268 20078
A27,A28	4822 466 10308
Connector of objective-wires	4822 268 20081
Connector of relay-wires	4822 264 30119
Connector of lid-switch-wires	4822 264 30119
Audio cinch connector	4822 264 30027
Audio 5p. DIN-connector	4822 264 40023
HF-B&L male connector	4822 264 30104
HF-B&L female connector	4822 266 10034
Laser-anode connector	4822 268 40098
Laser-cathode connector	4822 268 40099
Laser-connector contact	4822 268 20079

Video Disc Player 22VP600 - 22VP700

00/15/50/65

Service
Service
Service

LaserVision

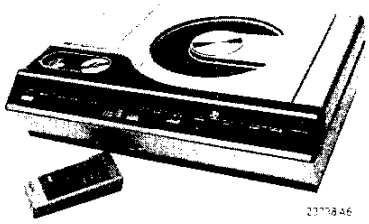

Safety regulations require that the set be restored to its original condition and that parts which are identical with those specified be used.

PART Ia

Service Manual

PART Ia

CONTENTS: CIRCUIT UNITS

- Circuit diagram
- Wiring diagram
- Parts list

U1000	Pre-amplifier
U1001	H.F.-processor
U1002	Drop-out detector
U1003	Video demodulator 1
U1004	Video demodulator 2
U1005	Luminance separator
U1006	Mixer switch
U1007	Subcarrier regenerator
U1008	Video processor
U1009	Sound demodulator 1
U1010	Sound demodulator 2
U1011	Colour separator
U1012	Reference control
U1013	Sample detector
U1014	Tangential phase detector
U1015	Search adapter
U1016	Focus drive
U1017	Radial drive
U1018	Slide drive
U1019	Tangential drive
U1020	Sequence logic

FOR SERVICE MANUALS
CONTACT:
MAURITRON TECHNICAL SERVICES
www.mauritron.co.uk
TEL: 01844 - 351694
FAX: 01844 - 352554

Copyright Video Service - VLP N.V. Philips' Gloeilampenfabrieken Eindhoven

Documentation Technique Service Dokumentation Documentazione di Servizio Huolte-Ohje Manual de Servicio Manual de Serviçio

Subject to modification
GB
4822 726 13215
Printed in The Netherlands

PHILIPS

CS 78 527

U1000 PRE-AMPLIFIER

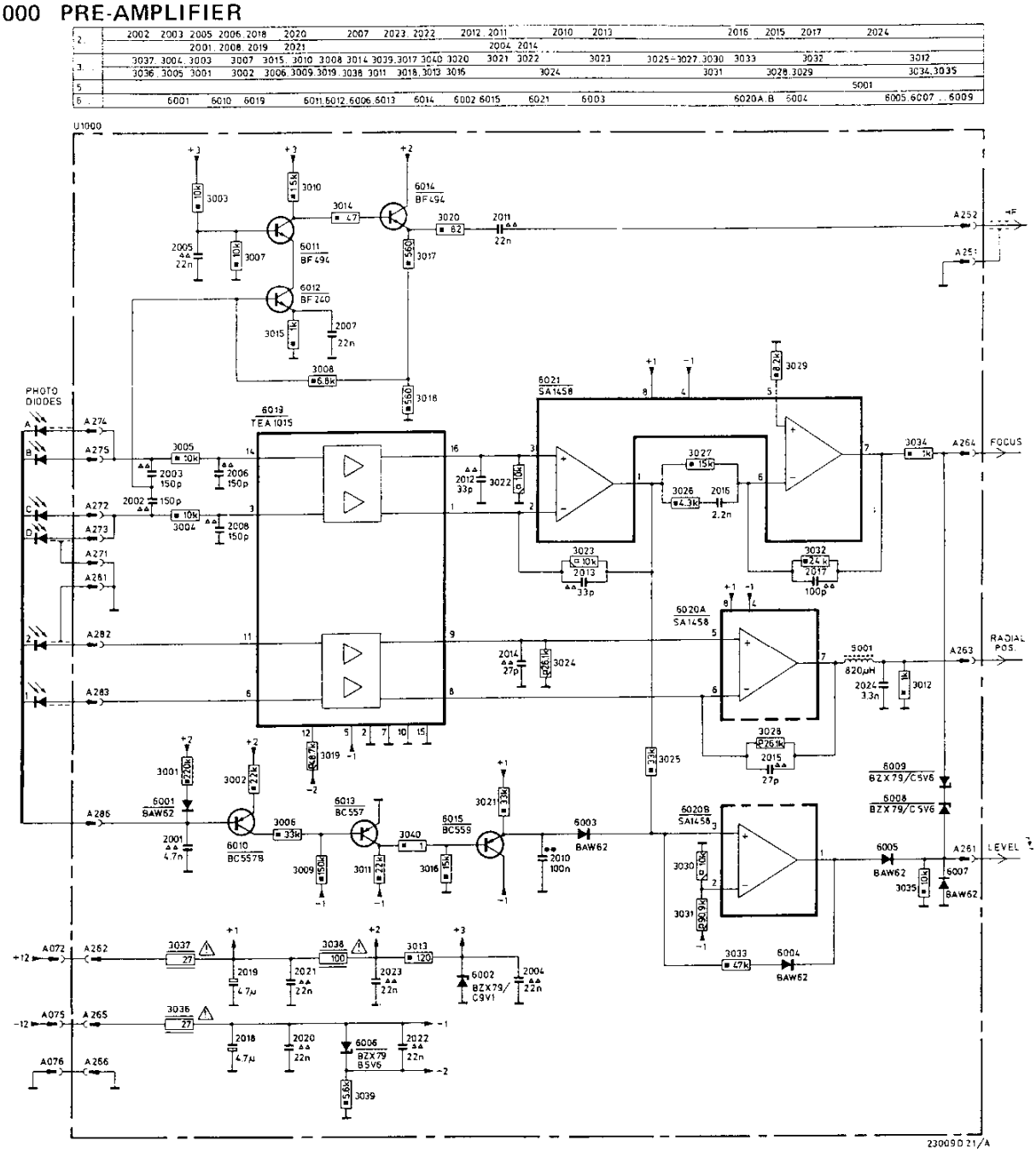

IC		
SA1458N		4822 209 80793
TEA1015		4822 209 80802
BC557		4822 130 44256
BC557B		4822 130 44568
BC559		4822 130 40963
BF240		4822 130 40902
BF494		4822 130 44195
BAW62		4822 130 30613
BZX79/B5V6		4822 130 34173
BZX79/C5V6		4822 130 34173
BZX79/C9V1		4822 130 30862
5001	820 µH	4822 158 20376
3036,3037	27 Ω NFR25	4822 111 30519
3038	100 Ω NFR25	4822 111 30535
2018,2019	4.7 µF - 63 V	4822 124 20726
2016	2.2 nF	4822 121 50415
2024	3.3 nF	5322 121 54049

2···	3···	3···	5···	6···	CONN.
				6003	
2020	3025	3035		6008	
				6009	
	3032	3034		6007	
	3002	3033		6010	
	3027	3029			
2016	3038	3031		6004	
2023	3026	3030			
2017	3001			6005	
2018	3021			6014	
				6021	
	3013	3037		6020	
				6001	
2004	3014			6002	
2010					
2013	3010				
2021	3007	3028			
2015	3020				
2012	3017	3016	5001	6015	
2005	3003	3024			
2019				6011	
2014	3040	3023		6006	
2022	3006				
2011	3009	3022			
		3019		6012	
2024	3011	3039			
2006	3018	3036		6013	
	3015				
2003	3008			6019	
2007	3005				
2001		3012			
2002	3004				
2008					
					A27
					A25
					A28
					A26

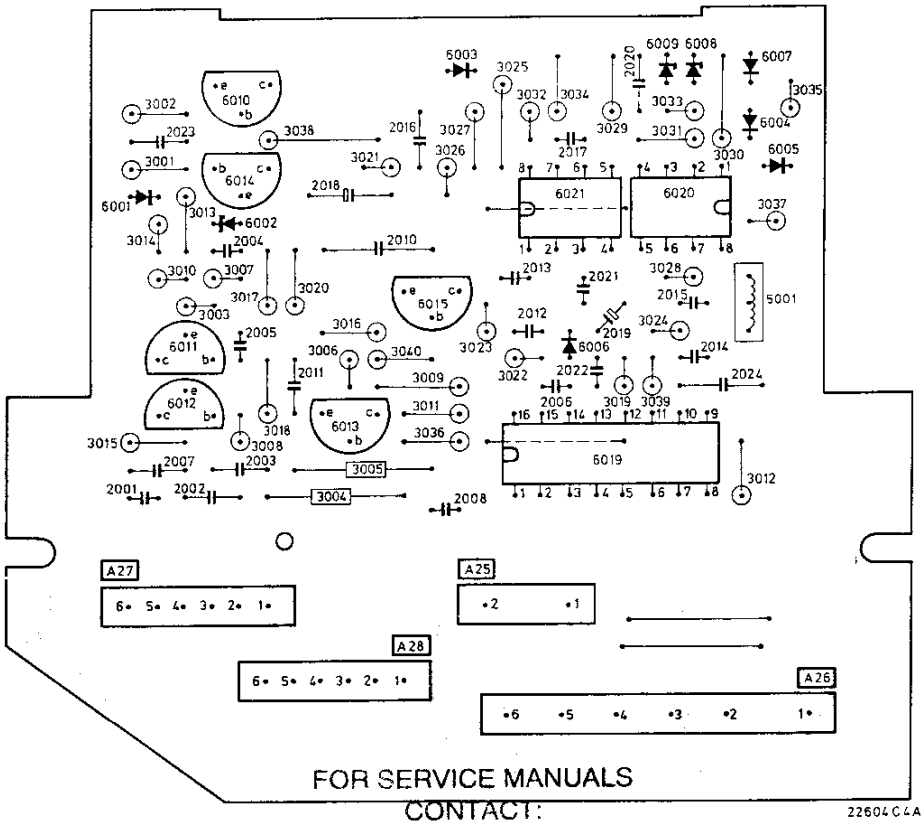

FOR SERVICE MANUALS
CONTACT:

MAURITRON TECHNICAL SERVICES

www.mauritron.co.uk
TEL: 01844 - 351694
FAX: 01844 - 352554

2···	3···	3···	5···	6···	CONN.
				6003	
		3025		6009	
2020	3035			6008	
	3034	3032		6007	
	3033	3002		6010	
	3029	3027			
2016	3031	3038		6004	
2023	3030	3026			
2017		3001		6005	
2018		3021		6014	
				6021	
	3037	3013		6020	
				6001	
2004		3014		6002	
2010					
2013		3010			
2021	3028	3007			
2015		3020			
2012	3016	3017	5001	6015	
2005	3024	3003			
2019				6011	
2014	3023	3040		6006	
2022		3006			
2011	3022	3009			
	3019			6012	
2024	3039	3011			
2006	3036	3018		6013	
		3015			
2003		3008		6019	
2007		3005			
2001	3012				
2002		3004			
2008					
					A27
					A25
					A28
					A26

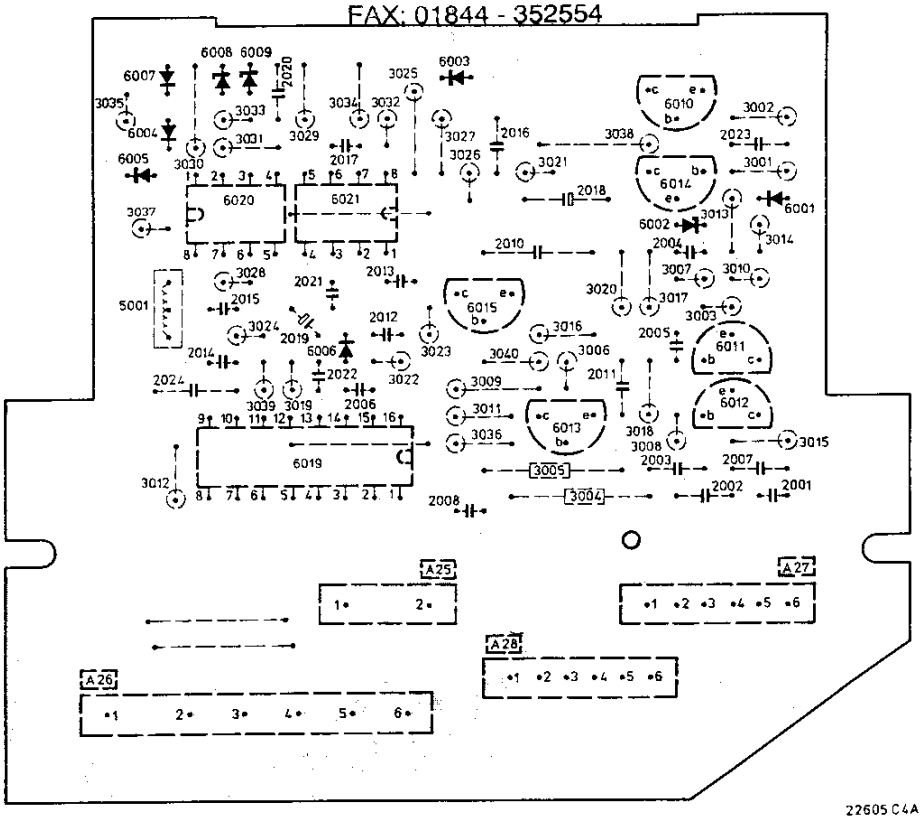

CS 78 528

U1001 HF PROCESSOR

2 . . .	2001 2002 2021÷2023. 2003. 2006. 2024÷2026. 2009. 2004. 2007. 2005. 2010. 2011. 2014. 2008. 2012. 2020. 2019 2017 2013 2015. 2016. 2018
3 . . .	3001 3002÷3004 3036÷3038. 3013÷3015. 3005÷3008. 3018. 3019. 3021. 3024. 3009÷3012. 3026. 3016. 3017. 3020. 3035. 3034. 3029÷3033. 3023. 3022. 3025. 3027. 3028
5 . . .	5003 5001 5002 5004 5005
6 . . .	6006 6007 6002 6010 6005 6008 6013. 6009. 6015 6001 6011. 6014 6012

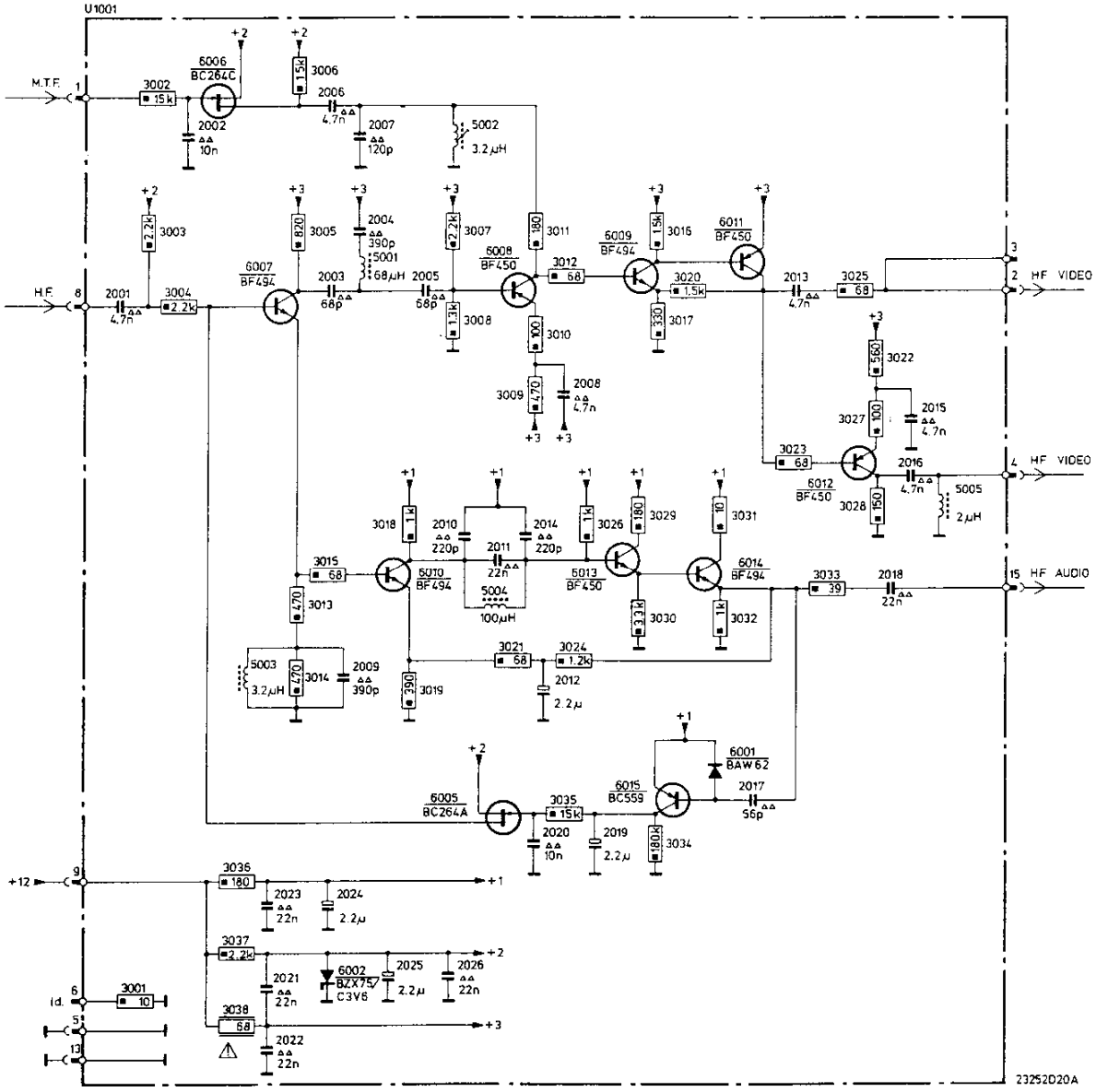

BC264A		5322 130 44476
BC264C		5322 130 44476
BC559		4822 130 40963
BF450		5322 130 44237
BF494		4822 130 44195
BAW62		4822 130 30613
BZX75/C3V6		4822 130 30765
5001	68 µH	4822 156 10522
5002,5003	3.2 µH	4822 156 10521
5004	100 µH	4822 156 10519
5005	2 µH	4822 156 10516
3038	68 Ω NFR25	4822 111 30531
2012,2019, 2025	2.2 µF - 63 V	4822 124 20724
2024	2.2 µF - 25 V	5322 124 14014

2...	3...	3...	5...	6...
	3010	3014	5003	6015
	3017			
2007				
2017			5002	
2019	3011			6008
	3009			
2008				6001
2024				
2009	3012			
			5004	
2002	3016	3008		6009
2006		3018		6010
2005	3006			6011
2011		3015		6006
2010				
2014	3020	3013		
	3007	3019		
2015	3005	3034		6013
2003		3026		
	3022	3021		
		3029		
		3030	5001	
2013				6007
	3023			6014
2004	3027	3024		
2021				6012
2022				
2012		3035		6005
2020	3028	3031		
	3004			
2025			5005	6002
2001		3032		
2026	3003			
2023		3033		
	3002			
		3037		
2016		3036		
2018				
	3025	3038		
	3001			

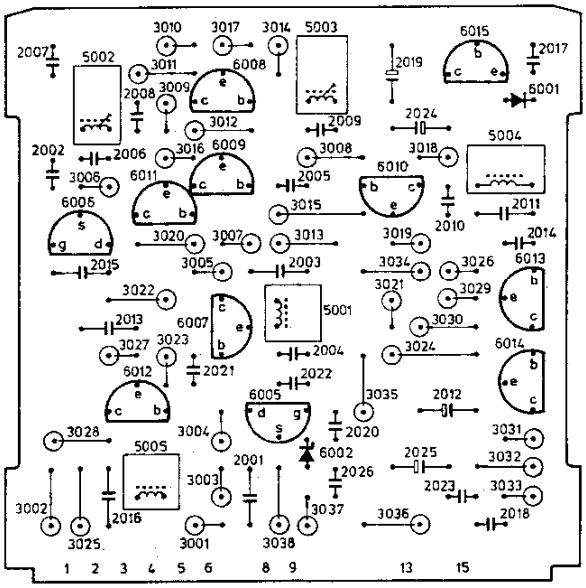

2...	3...	3...	5...	6...
	3014	3010	5003	6015
		3017		
2017			5002	
2007				
2019		3011		6008
		3009		
2008				6001
2024				
2009		3012		
			5004	
2006	3018	3016		6009
2002	3008			6010
2005		3006		6011
2011	3015			6006
2010				
2014	3019	3020		
	3013	3007		
2003	3026			
2015	3034	3005		6013
	3021	3022		
	3029			
			5001	
2013	3030			6007
		3023		
2004	3024	3027		6014
2021				
2022				6012
2012	3035			6005
		3004		
2020	3031	3028		
			5005	
2025	3032			6002
2001				
2026	3033	3003		
2023				
		3002		
2018	3037			
2016	3036			
	3038	3001		
		3025		

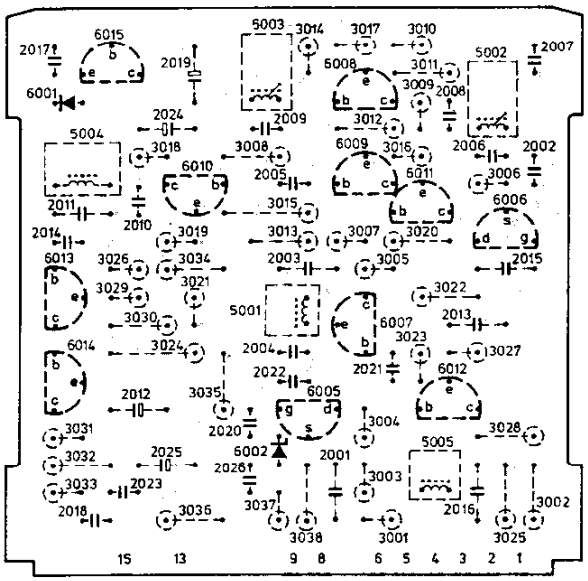

23508C8

FOR SERVICE MANUALS
CONTACT:

MAURITRON TECHNICAL SERVICES

www.mauritron.co.uk
TEL: 01844 - 351694
FAX: 01844 - 352554

U1002 DROP-OUT-DETECTOR

2...	2001··· 2005 2018··· 2020 2007 2006 2012 2008 2010 2011 2014 2013 2021 2017 2015
3...	3003 3004 3007 3005 3006 3008 3012···3015 3017 3018 3022 3023 3024 3021 3025 3027 3026 3032 3035
3...	3001 3002 3038 3039 3009 3010 3011 3040 3016 3019 3020 3028 3029 3030 3033 3036 3031 3034 3037
5...	5001 5002 5003 5004
6...	6009 6010 6002 6012 6015 6013 6017
6...	6001 6008 6011 6016 6019 6018 6014 6020

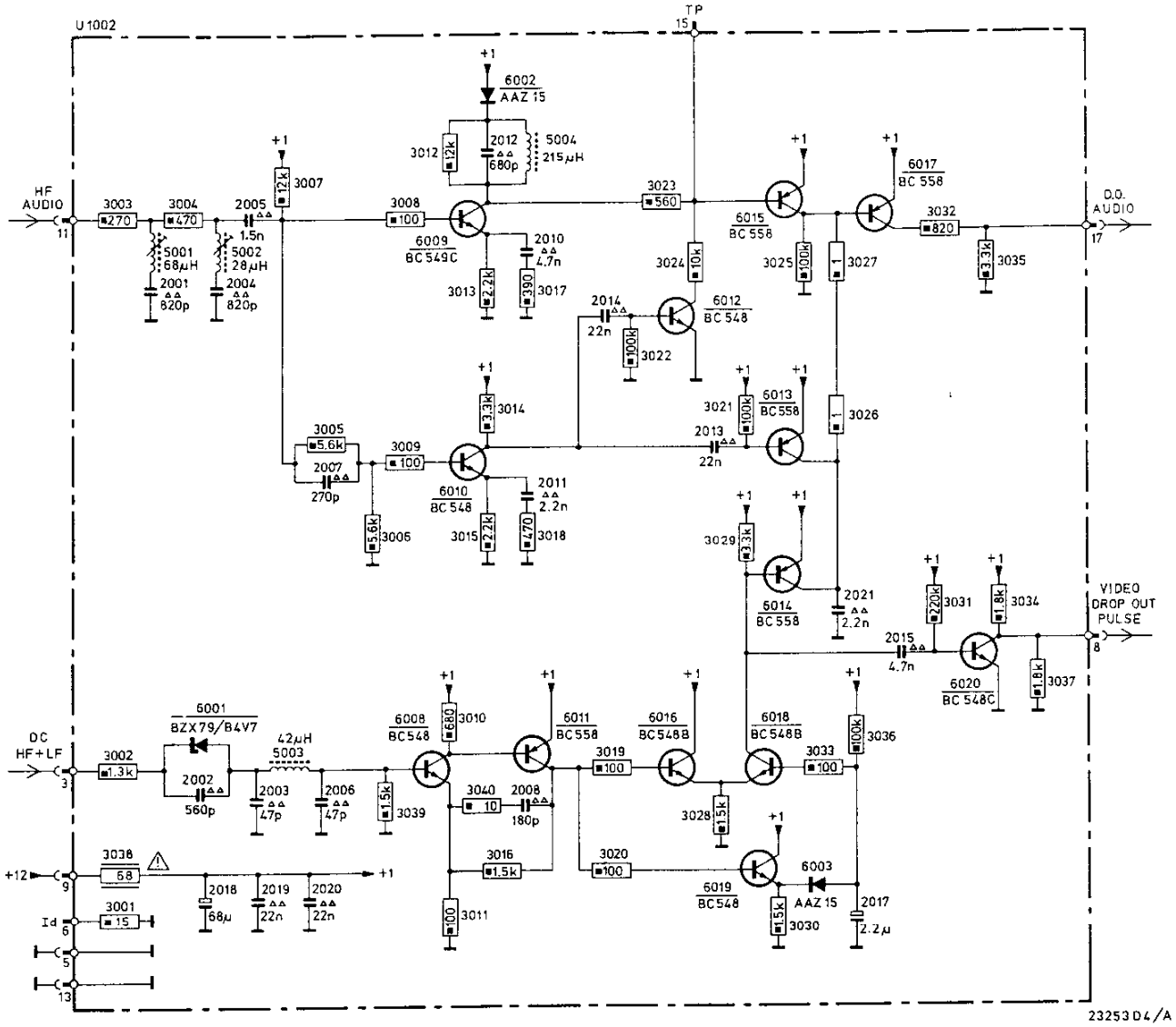

BC548		4822 130 40938
BC548B		4822 130 40937
BC548C		4822 130 44196
BC549C		4822 130 44246
BC558		4822 130 40941
AAZ15		4822 130 30229
BZX79/B4V7		4822 130 34174
5001	68 µH	4822 156 10527
5002	28 µH	4822 156 10528
5003	42 µH	4822 156 10529
5004	215 µH	4822 156 20924

3038	68 Ω NFR25	4822 111 30531
2017	2.2 µF - 63 V	4822 124 20724
2018	68 µF - 16 V	4822 124 20689

2...	3...	3...	5...	6...
2013 2014	3021 3024	3014 3023		6013 6010 6002
2021 2012	3022	3012 3018 3009		6012 6014
2011		3030		
	3040 3026	3015	5004	6019 6003
2008	3020			
2007 2017	3011 3016 3019	3036		6009
	3033	3006 3008 3005 3007		6018 6008 6011
	3029			
2010 2015 2005	3039 3010	3013 3028	5002	
2006	3031	3027 3017		6016
2020 2004	3034 3037	3025 3004	5003 5001	6020
				6017 6015
2003	3001	3003		
2018 2001		3032		6001
2002 2019	3038 3002	3035		

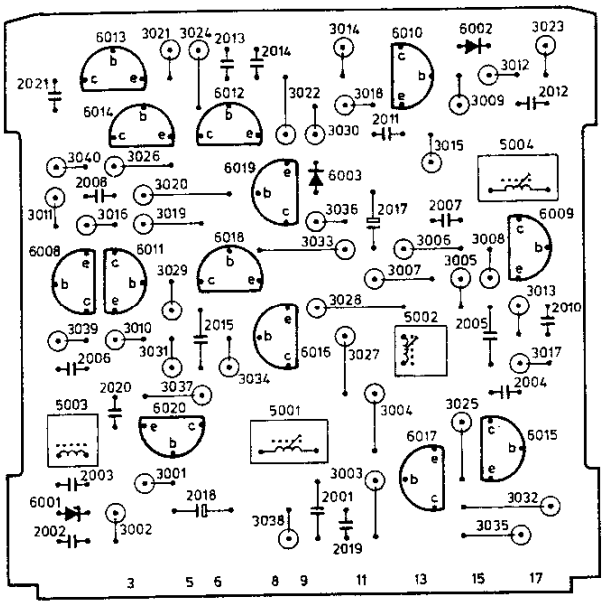

2...	3...	3...	5...	6...
2013 2014	3023 3014	3024 3021		6002 6010 6013
2021 2012	3012 3018	3022		6012 6014
2011	3009			
	3030 3015	3026 3040	5004	6019 6003
2008		3020		
2007 2017	3036	3019 3016 3011		6009
		3008 3006 3005 3007	3033 3029	6018 6011 6008
2010 2005 2015	3013 3028	3010 3039	5002	
2006	3017 3027	3031		6016
2004 2020	3025 3004	3034 3037	5001 5003	6020
				6015 6017
2003	3003	3001		
2018 2001	3032			6001
2002 2019	3035	3038 3002		

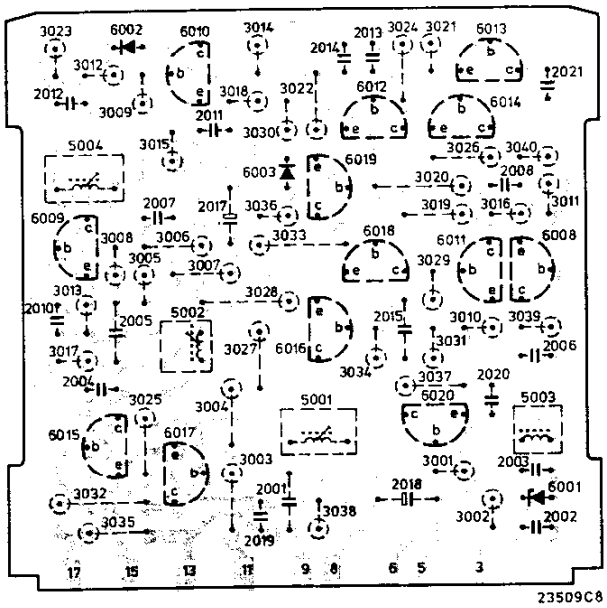

FOR SERVICE MANUALS
CONTACT:
MAURITRON TECHNICAL SERVICES
www.mauritron.co.uk
TEL: 01844 - 351694
FAX: 01844 - 352554

U1003 VIDEO DEMODULATOR 1

2...	2001 2013 2017 2010 2002 2018 2016 2004 2005 2003 2007 2008 2009 2011 2012 2014 2015 2006
3...	3001 3027 3003 3002 3005 3028 3006 3016 3014 3009 3013 3011 3012 3010 3008 3019 3021 3023 3022 3015 3024 3017 3018 3020 3025 3026 3007
5...	5004 5006 5007 5005 5001 5002 5003 5008
6...	6001 6003 6009 6002 6005 6006

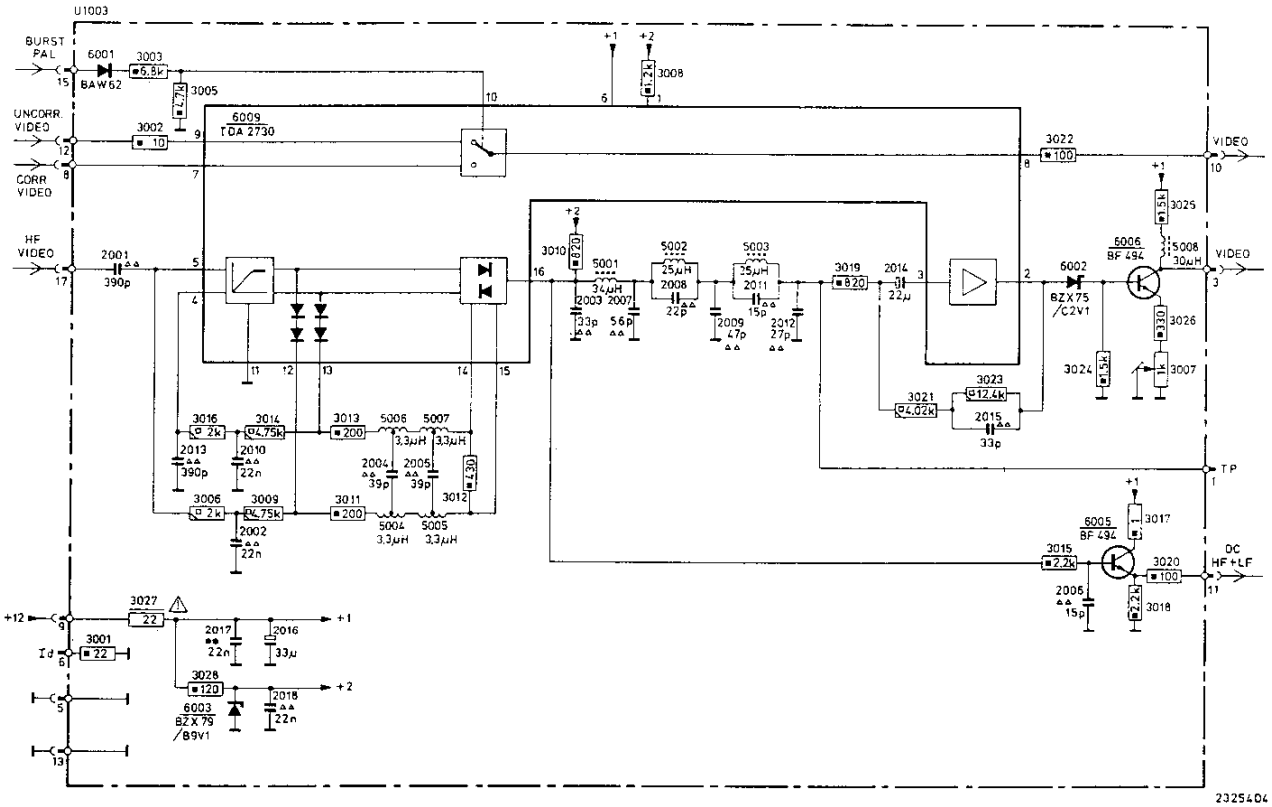

TDA2730		4822 209 80565
BF494		4822 130 44195
BAW62		4822 130 30613
BZX75/C2V1		4822 130 34049
BZX79/B9V1		4822 130 30862
5001	34 μH	4822 157 51166
5002,5003	25 μH	4822 157 51167
5004...5007	3.3 μH	4822 157 51163
5008	30 μH	4822 156 20926

3007	1 kΩ	4822 100 10255
3027	22 Ω NFR25	4822 111 30517
2014	22 μF - 10 V	4822 124 20943
2016	33 μF - 16 V	4822 124 20688

2...	3...	3...	5...	6...
			5005	
			5004	
2003	3010	3007	5001	
				6003
2005		3012		
2004	3008	3011		
2008				
2007			5007	
2018			5006	
2009		3013		6009
	3028			
			5002	
2014				
			5003	
2017		3005		
2015		3014		
		3009		
2010	3023	3002		
		3006		
	3021	3016		
2011				
2013				6002
2002	3019			
2016	3024			
		3018		
2012	3025	3017		
		3015		
		3003		
	3026			6006
				6005
2001			5008	
				6001
	3027			
2006	3001	3020		
		3022		

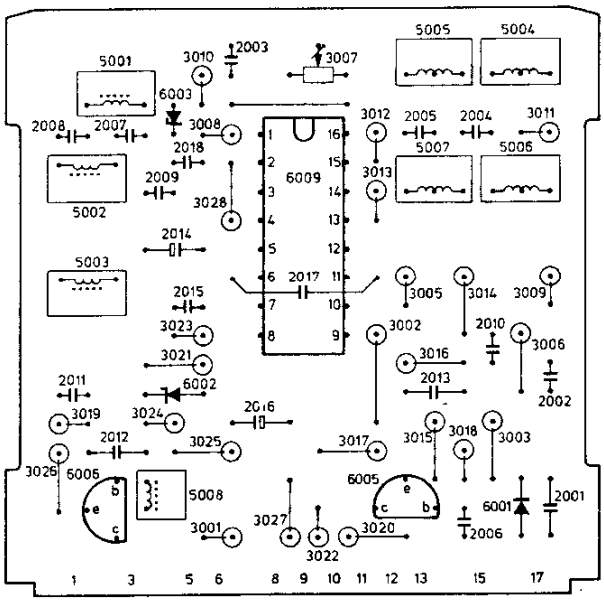

2...	3...	3...	5...	6...
			5004	
			5005	
2003	3007	3010	5001	
				6003
2004	3011			
2005	3012	3008		
2007				
2008				
2018			5006	
2009	3013		5007	6009
		3028		
			5002	
2014				
			5003	
2017				
2015	3009			
	3014			
	3005			
2010	3002	3023		
	3006			
	3016	3021		
2013				
2011				6002
2002		3024		
2016		3019		
	3018			
2012	3003	3025		
	3015			
	3017			
		3026		
				6005
				6006
2001			5008	
				6001
		3027		
2006	3020	3001		
	3022			

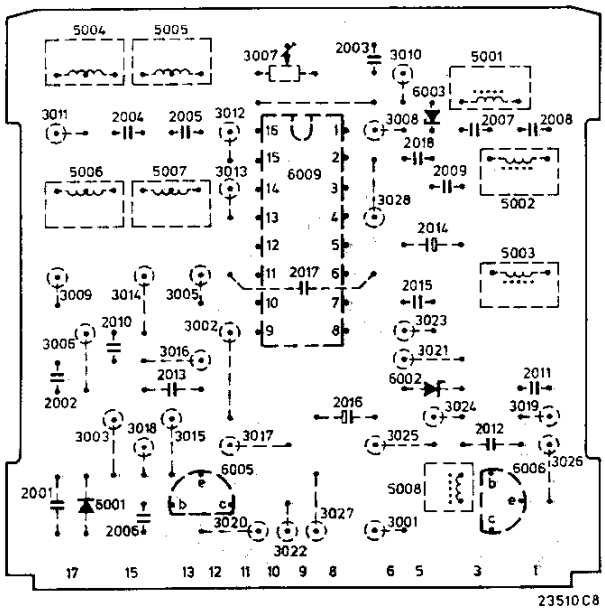

23510 C8

FOR SERVICE MANUALS
CONTACT:
MAURITRON TECHNICAL SERVICES
www.mauritron.co.uk
TEL: 01844 - 351694
FAX: 01844 - 352554

U1004 VIDEO DEMODULATOR 2

2...	2009 2001 2014 2013 2010 2015 2016 2017 2011 2012 2002 2004 2003 2005 2006 2007 2008
3...	3001 3002 3017 3003 3023 3027 3018 ··· 3021 3022 3006 3005 3004 3007 3008 3009 3011 3010 3013 3014 3015 3016
5...	5001 5004 5005 5008 5002 5003
6...	6012 6001 6002

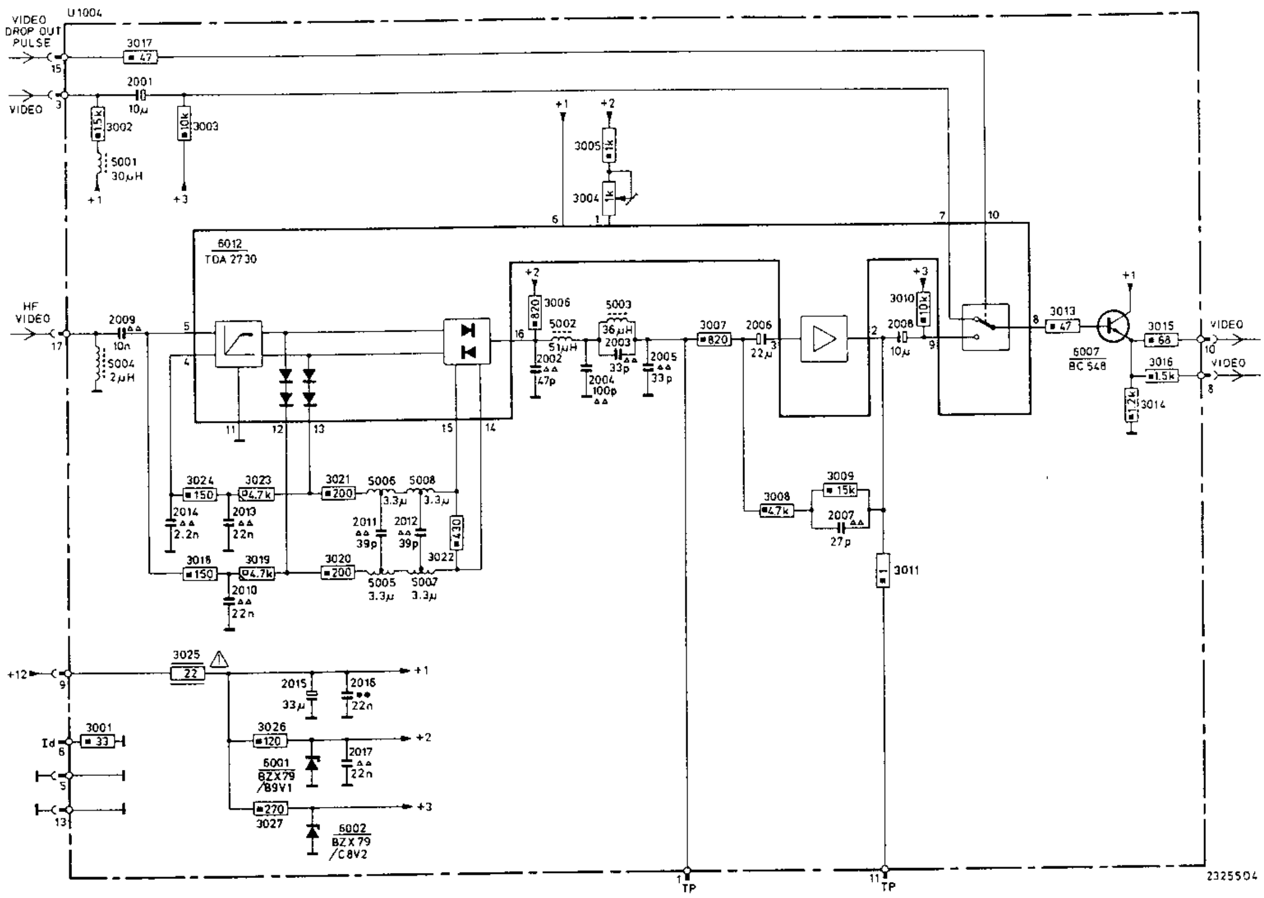

TDA2730 — 4822 209 80565	3004 — 1 kΩ — 4822 100 10255
BC548 — 4822 130 40938	3025 — 22 Ω NFR25 — 4822 111 30517
BZX79/B9V1 — 4822 130 30862 BZX79/C8V2 — 4822 130 34382	2001,2008 — 10 µF - 25 V — 4822 124 20697 2006 — 22 µF - 10 V — 4822 124 20943 2015 — 33 µF - 16 V — 4822 124 20688
5001 — 30 µH — 4822 156 20926 5002 — 51 µH — 4822 157 51165 5003 — 36 µH — 4822 157 51164 5004 — 2 µH — 4822 156 10516 5005...5008 — 3.3 µH — 4822 157 51163	

2...	3...	3...	5...	6...
	3006 3005		5008 5006	
2002		3004		6001
2017				
2012 2011	3009	3021		
2007			5002	
		3022	5007 5005	6012
	3008			
2006	3007			
2004	3026	3020		
2003 2016		3019		
2013 2010 2008			5003 5001	
	3002 3003	3023		
2001 2009	3013	3010 3018 3024		6002 6007
2015	3027			
2005 2014	3016 3014 3001	3025 3015 3017 3011	5004	

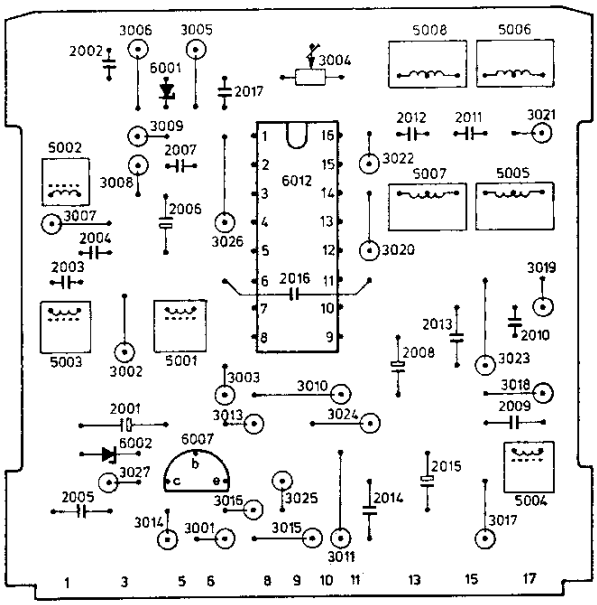

2...	3...	3...	5...	6...
		3005 3006	5006 5008	
2002	3004			6001
2017				
2011 2012	3021	3009		
2007			5002	
	3022		5005 5007	6012
		3008		
2006		3007		
2004		3026		
2003 2016	3020 3019			
2013 2010 2008			5001 5003	
	3023	3002 3003		
2009 2001	3018 3010 3024	3013		6007 6002
2015		3027		
2005 2014	3025 3017 3015	3016 3014 3001	5004	
	3011			

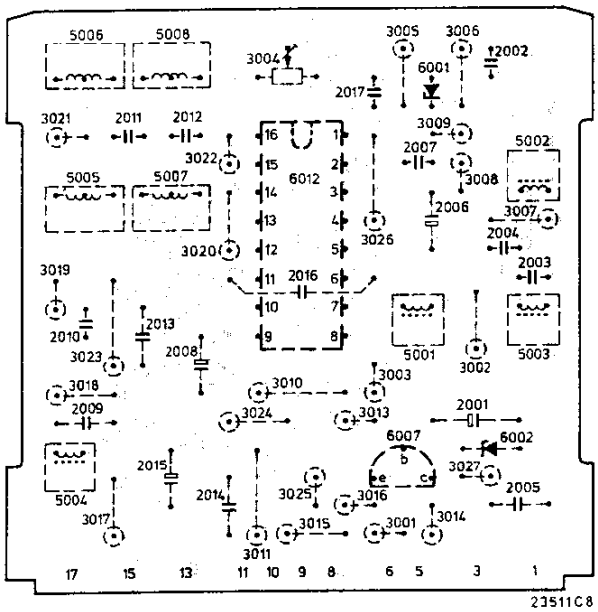

FOR SERVICE MANUALS
CONTACT:
MAURITRON TECHNICAL SERVICES
www.mauritron.co.uk
TEL: 01844 - 351694
FAX: 01844 - 352554

U1005 LUMINANCE SEPARATOR

2 . . .	2001 2002 2003 2018 2019 2020 2016 2017
2 . . .	2010 2014 2004 2005 2013 2006 2011 2012 2008 2015 2009
3 . . .	3001 3003 3002 3034···3039 3028 3029···3032 3033 3013 3015
3 . . .	3017 3018···3023 3004 3005 3024 3025 3006···3010 3026 3011 3012 3014 3027 3016
5 . . .	5001 5002 5004 5003
6 . . .	6001 6008 6002 6003 6011 6012 6006 6009 6010 6007

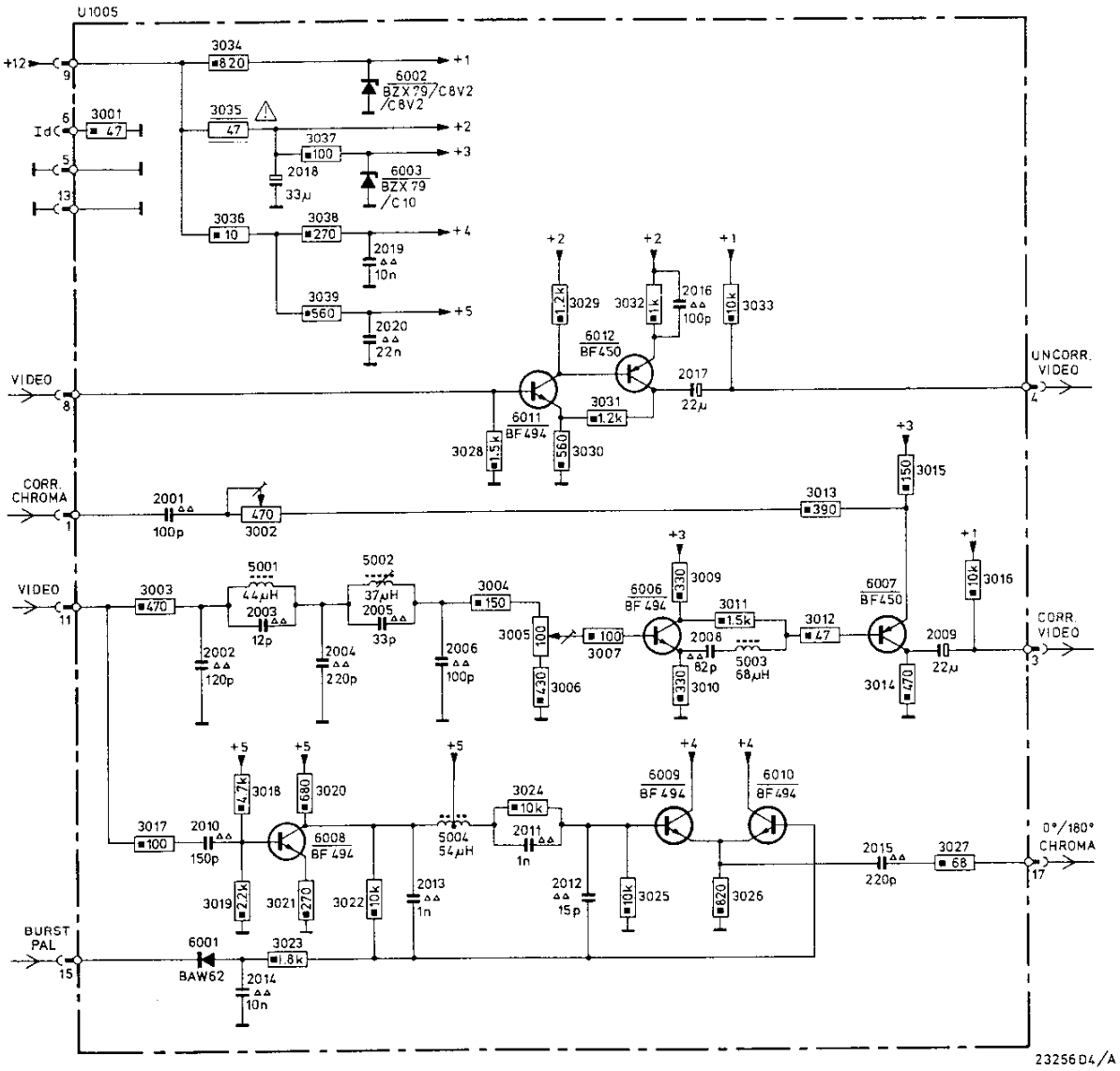

BF450		5322 130 44237
BF494		4822 130 44195
BAW62		4822 130 30613
BZX79/C8V2		4822 130 34382
BZX79/C10		4822 130 34297
5001	44 μH	4822 158 20378
5002	37 μH	4822 156 10523
5003	68 μH	4822 156 10522
5004	54 μH	4822 158 20374

3002	470 Ω	4822 100 10023
3005	100 Ω	4822 100 10073
3035	47 Ω NFR25	4822 111 30526
2009,2017	22 μF - 25 V	4822 124 20698
2018	33 μF - 16 V	4822 124 20688

CS 78 533

2...	3...	3...	5...	6...
	3002		5002	6008
	3005			
	3006	3019		
		3021		
	3004	3018		
2006	3007	3020		
2005				
2004				
2020			5001	6006
2003	3010		5004	
2010	3009			
2008				
2002		3039		
2011	3011	3003		
2013	3037	3017		
2016		3022	5003	6012
		3032		
	3013	3024		6003
2017		3025		
2012	3031			
2018	3012			6009
	3030			6007
2019	3015			6002
				6010
	3014	3029		
	3028	3038		
2014	3016			6011
2009		3023		
		3035		
2015	3033	3026		
	3001	3036		
2001	3034	3027		
				6001

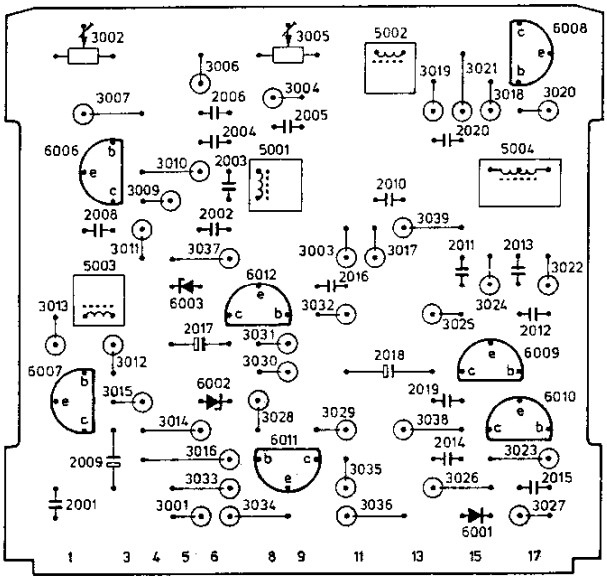

2...	3...	3...	5...	6...
		3005	5002	6008
		3002		
	3021	3006		
	3019	3007		
2006	3020	3004		
	3018			
2005				
2004				
2020			5004	6006
2003		3010	5001	
2010		3009		
2002				
2008	3039			
2013	3003	3037		
2011	3017	3011		
2016	3022		5003	6012
	3024			
	3032	3013		6003
2012	3025			
2017		3031		
2018		3012		6009
		3030		6007
2019		3015		6002
	3029	3028		6010
	3038	3014		
2014	3023	3016		6011
2009	3035			
2015	3026	3033		
	3027	3034		
2001	3036	3001		
				6001

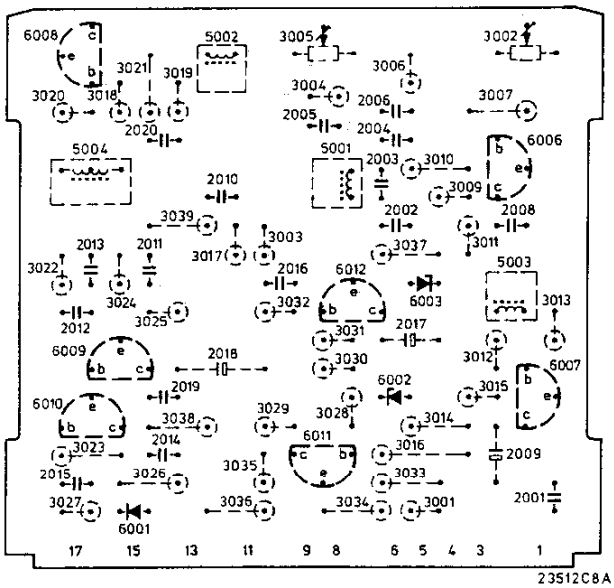

FOR SERVICE MANUALS
CONTACT:

MAURITRON TECHNICAL SERVICES

www.mauritron.co.uk
TEL: 01844 - 351694
FAX: 01844 - 352554

U1006 MIXER SWITCH

2 . .	2003 2014 2015 2001 2002 2013 2004 2006 2007 2005 2008 2009 2010 2011 2012
3 . .	3006 3007 3028 3008 3029 3009 ··· 3012 3027 3017 3016 3019 3018 3021 3023 3022 3024 3026 3025
3 . .	3001 3030 3031 3032 3004 3005 3003 3014 3015 3002 3013 3020
5 . .	5001 5002 5003
6 . .	6005 6001 ··· 6004 6013 6010 6018 6011 6012

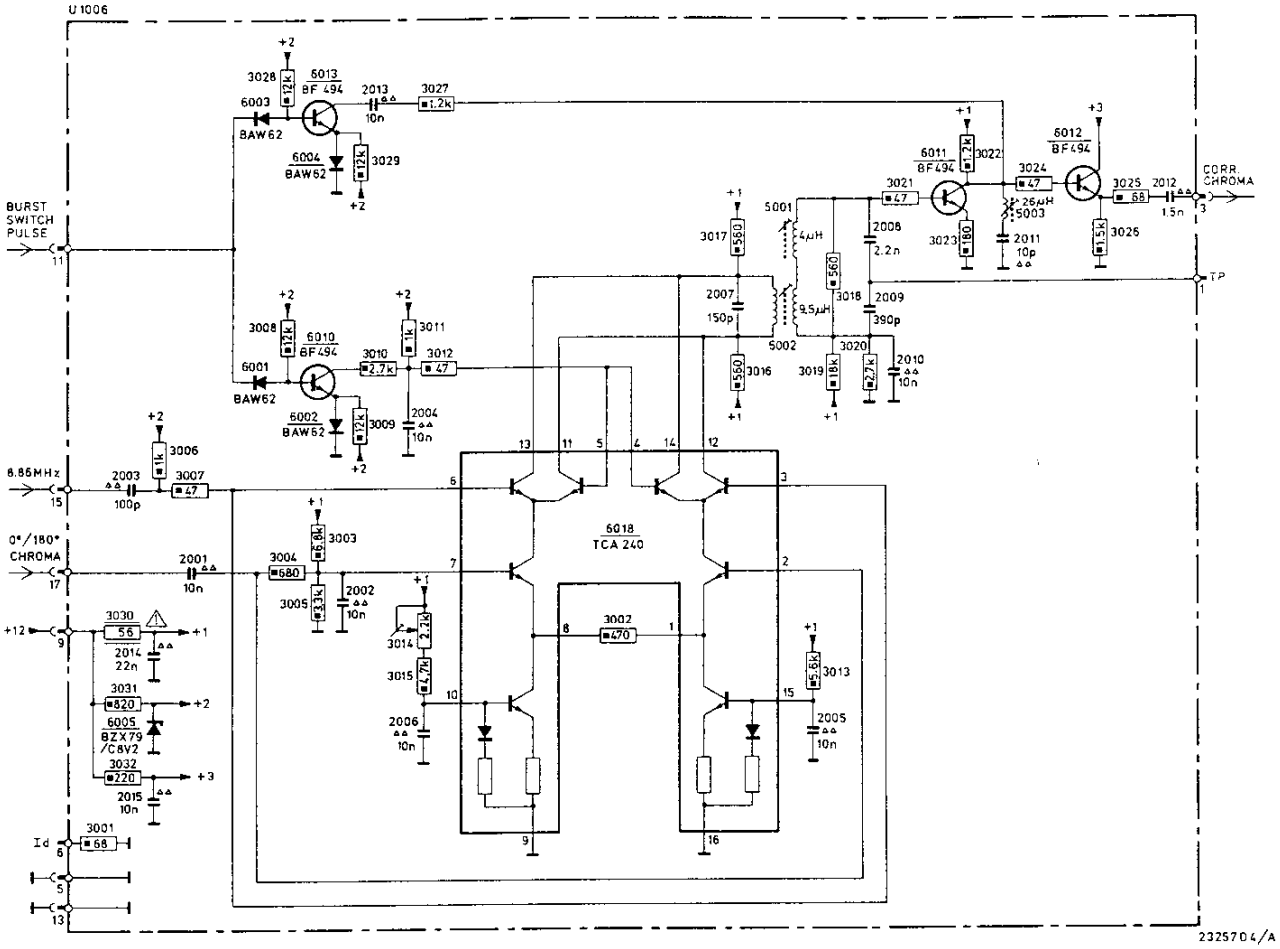

TCA240		4822 209 80629
BF494		4822 130 44195
BAW62		4822 130 30613
BZX79/C8V2		4822 130 34382
5001	4 µH	4822 156 20921
5002	9.5 µH	4822 156 20919
5003	26 µH	4822 156 10524

3014	2.2 kΩ	4822 100 10027
3030	56 Ω NFR25	4822 111 30528
2007	150 pF - 630 V	4822 121 50416
2008	2.2 nF - 630 V	5322 121 54139
2009	390 pF - 630 V	5322 121 54128

2...	3...	3...	5...	6...
	3018	3019	5001 5002	
	3020	3014		
2010		3015		
2006 2002		3003		
2009				
2008		3005		6018
	3021	3004		6011
2007	3016			
	3023 3017	3012 3007		
2014 2001	3013			
2005	3027	3002		
2013	3022		5003	6013
2011 2004				6004
	3030 3029	3010		6002
	3024 3032	3028		6012
2015		3009 3006		6010
	3025 3026	3008 3011		6003 6001
2012 2003	3001 3031			6005

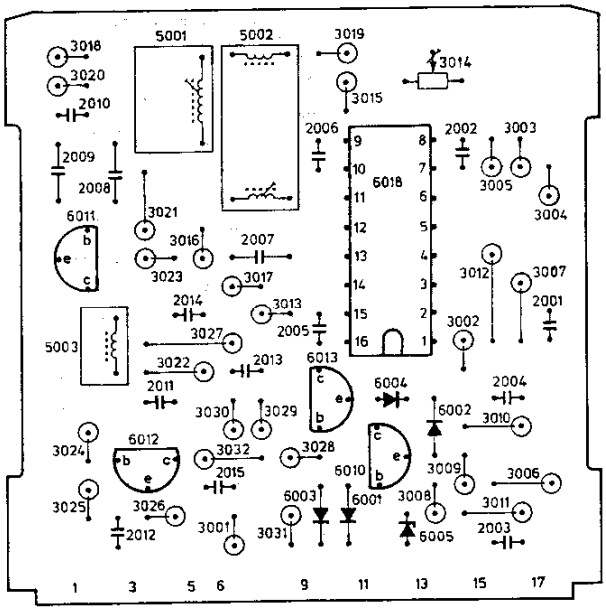

2...	3...	3...	5...	6...
	3019	3018	5002 5001	
	3014	3020		
2010	3015			
2002 2006	3003			
2009				
2008	3005			6018
	3004	3021		6011
2007		3016		
	3007 3012	3017 3023		
2001 2014		3013		
2005	3002	3027	5003	
2013		3022		6013
2004 2011				6004
	3010	3029 3030		6002
	3028	3032 3024		6012
2015	3009 3006			6010
	3008 3011	3026 3025		6001 6003
2003 2012		3001 3031		6005

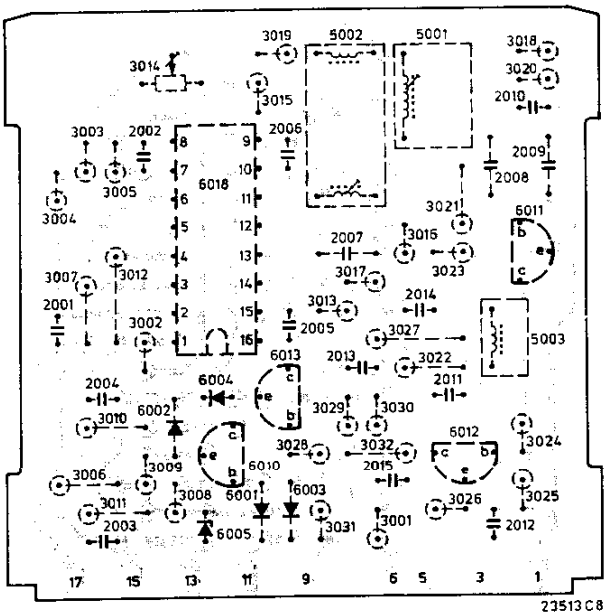

FOR SERVICE MANUALS
CONTACT:

MAURITRON TECHNICAL SERVICES

www.mauritron.co.uk
TEL: 01844 - 351694
FAX: 01844 - 352554

CS 78 534

2...	3...	3...	5...	6...
2011	3021	3020	5002	6011
2010		3022		
2001		3003		
	3023	3017		6009
2002		3018		
		3007		
2015		3004		
2016				
2014		3005		6006
2006				
2009		3029		
2005				
		3014		
		3006		
		3016		
2012				
2004	3024			6007
	3025			
	3026	3008	5001	6017
2003	3027	3015		6008
		3012		6012
		3013		
		3010		
2007		3011		6010
2017				
2008	3028			6002
	3031	3009		
2013	3001	3002		6001
	3019	3030		
2018				

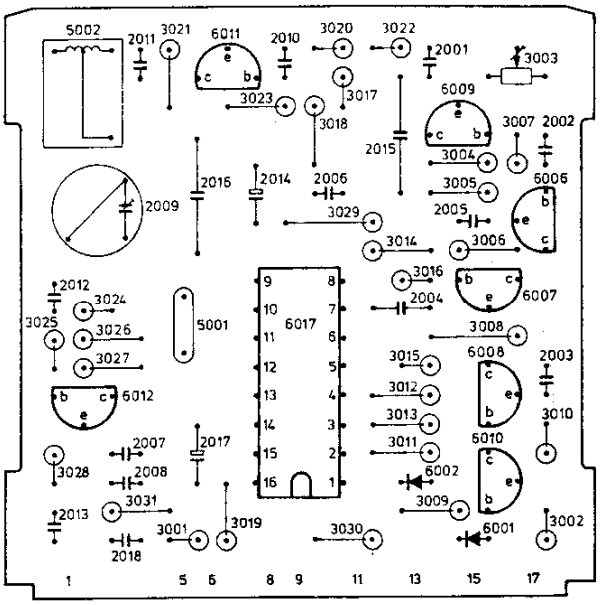

2...	3...	3...	5...	6...
	3022			
2010	3020	3021	5002	6011
2011				
2001	3003			
	3017	3023		6009
2002	3007			
2015	3018			
	3004			
2006				
2014	3005			6006
2016				
2009	3029			
2005				
	3006			
	3014			
	3016			
2012				
2004		3024		6007
		3025	5001	
	3008	3026		6017
2003	3015	3027		6008
	3012			
				6012
	3010			
	3013			
2017				
2007	3011			6010
2008				6002
		3028		
	3009	3031		
2013	3002	3019		6001
	3030	3001		
2018				

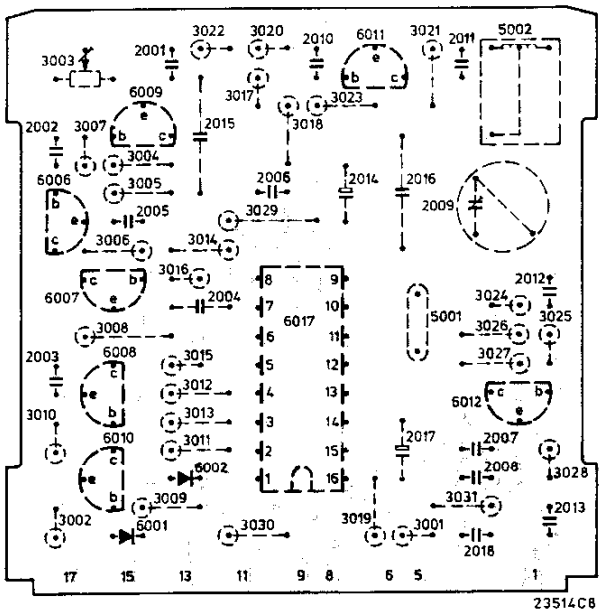

U1007 SUBCARRIER REGENERATOR

2	2017 2018	2001 - 2003	2004	2005, 2014 - 2016	2006	2007 ÷ 2010	2011	2012	2013
3	3002, 3030, 3031, 3001, 3003 - 3011	3012 - 3019, 3029	3020 - 3023	3024 ÷ 3028
5	5001	5002
6	6001, 6010, 6002, 6006 - 6008	6009	6017	6011	6012

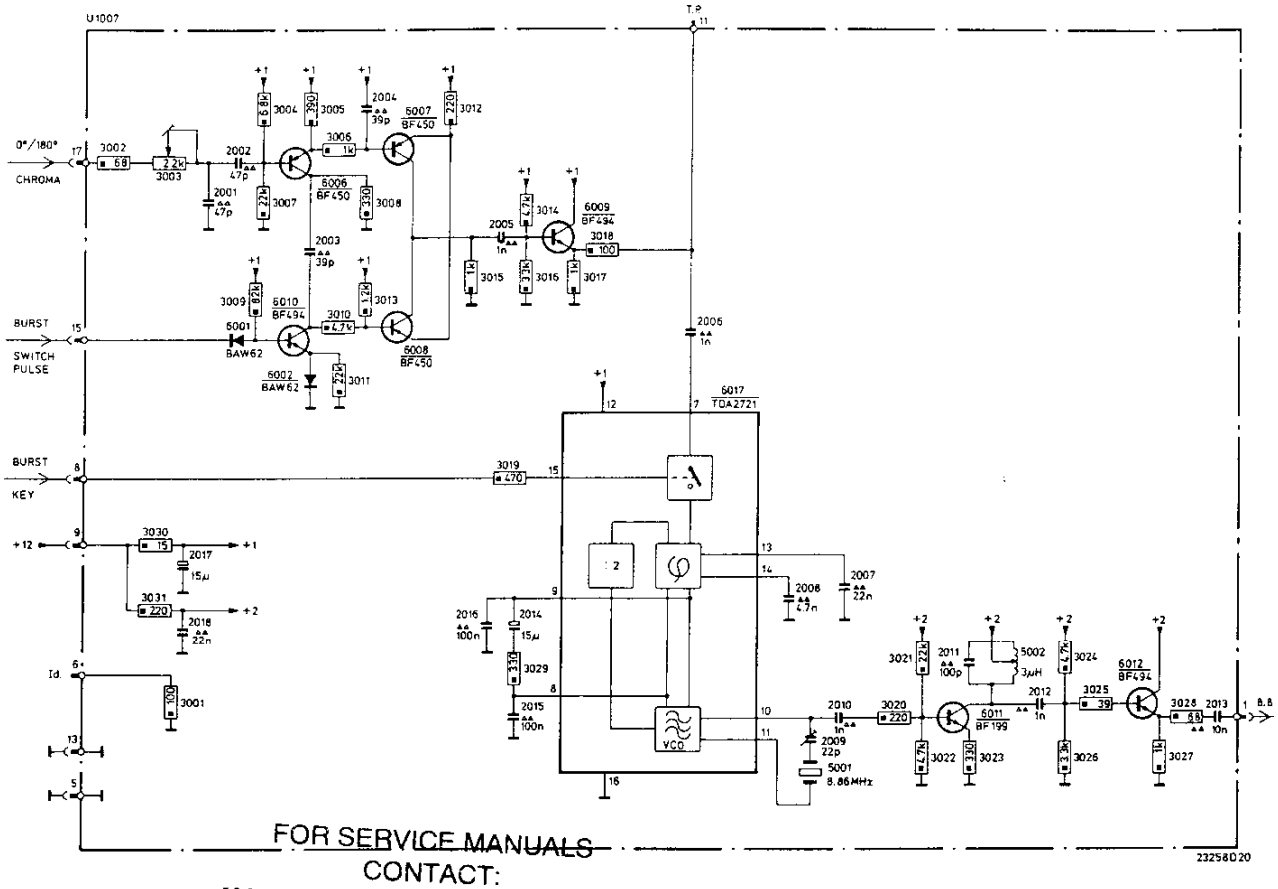

FOR SERVICE MANUALS
CONTACT:
MAURITRON TECHNICAL SERVICES
www.mauritron.co.uk
TEL: 01844 - 351694
FAX: 01844 - 352554

TDA2721		4822 209 80568	5002	3 μH	4822 156 20922
BF199 BF450 BF494		4822 130 44154 5322 130 44237 4822 130 44195	3003	2.2 kΩ	4822 100 10027
BAW62		4822 130 30613	2014,2017	15 μF - 40 V	4822 124 20709
5001	8.86 MHz	4822 242 70304	2009	22 pF	4822 125 50045

U1008 VIDEO PROCESSOR

2...	2002 2001 2008···2010 2011 2012 2003 2004···2007
3...	3002···3005 3006 3007 3027 3008···3014 3015 3016 3017 3018 3019
3...	3001 3023 3024 3025 3026 3020···3022
5...	5001 5002
6...	6009 6003 6004 6006 6012 6013 6005 6014 6015 6007 6017
6...	6001 6002 6010 6011 6008 6018 6016

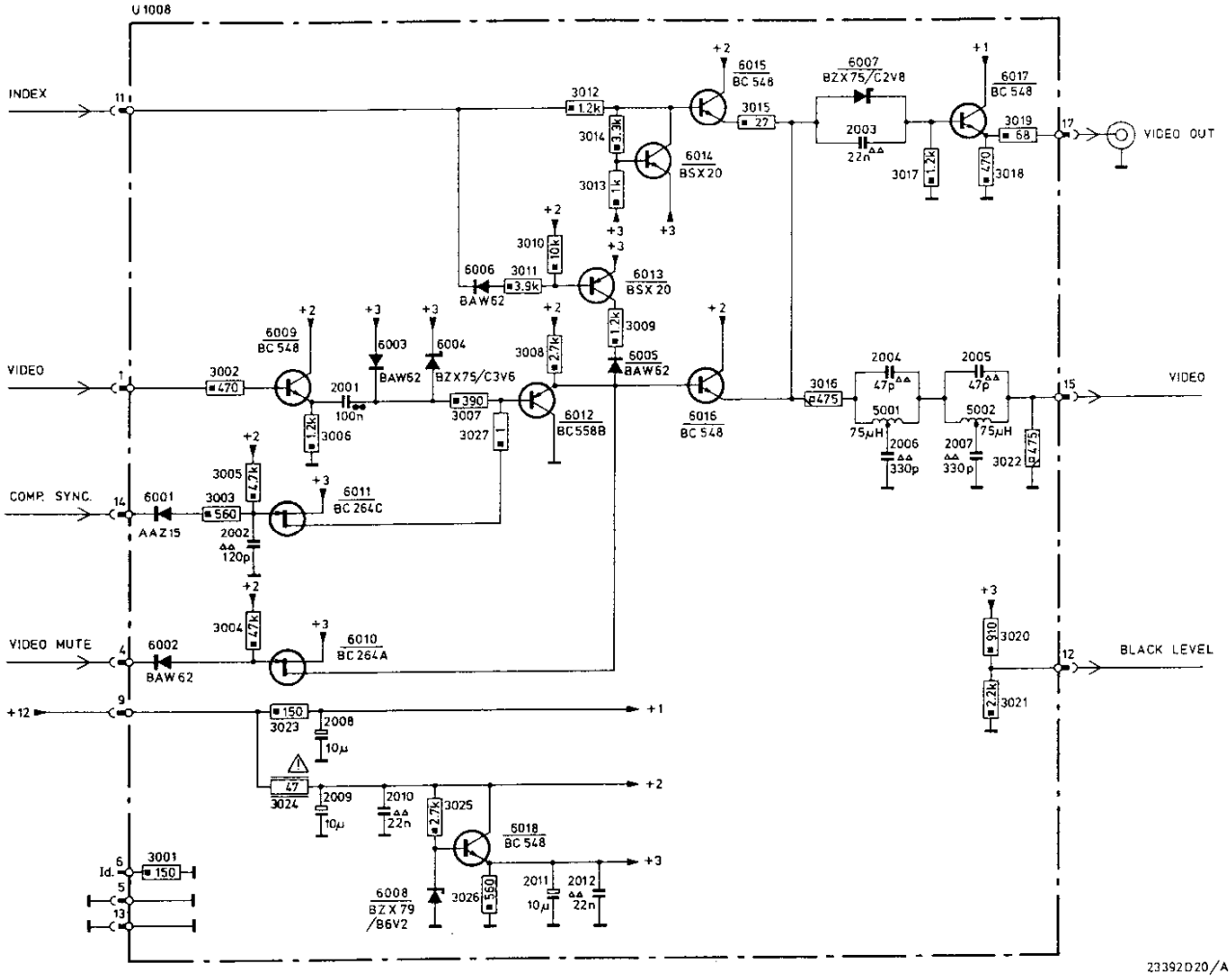

BC264A	5322 130 44476	5001,5002	75 µH	4822 156 10533
BC264C	5322 130 44476			
BC548	4822 130 40938	3024	47 Ω NFR25	4822 111 30526
BC558B	4822 130 44197			
BSX20	5322 130 40417			
AAZ15	4822 130 30229	2008,2009, 2011	10 µF - 25 V	4822 124 20697
BAW62	4822 130 30613			
BZX75/C2V8	4822 130 34048			
BZX75/C3V6	4822 130 30765			
BZX79/B6V2	4822 130 34167			

2...	3...	3...	5...	6...
	3008	3009		6005
	3004	3011		6013
	3005	3010		6015
				6016
				6012
	3007			
				6010
		3013		6007
				6003
2003		3015		6004
		3020		
		3017		6017
	3027			
		3016		6011
2011				6014
	3014	3018		
	3026	3019		
	3012			
2001				6006
2012			5001	
2006				
2002				6018
2008				
2004				
2005	3025			6008
2007		3003		
	3006	3023		
2010				6009
2009		3021		
			5002	
	3024			6002
				6001
	3002			
	3001	3022		

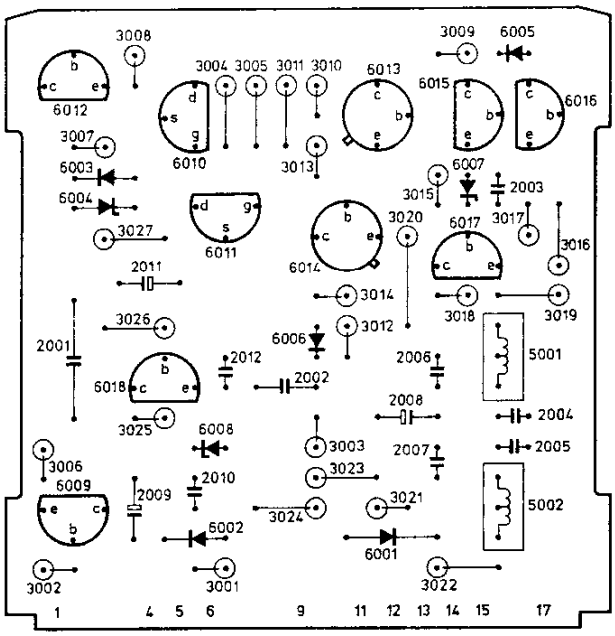

2...	3...	3...	5...	6...
	3009	3008		6005
	3011	3004		
	3010	3005		6013
				6015
				6016
				6012
		3007		
				6010
	3013			6007
				6003
2003	3015			6004
	3020			
	3017	3027		6017
	3016			
				6011
2011				6014
		3014		
	3018			
	3019	3026		
2001		3012		
2012				6006
2006			5001	
2002				6018
2008				
2004				
		3025		6008
2005	3003			
2007		3006		
	3023			
2010				6009
2009	3021			
			5002	
		3024		6002
				6001
		3002		
	3022	3001		

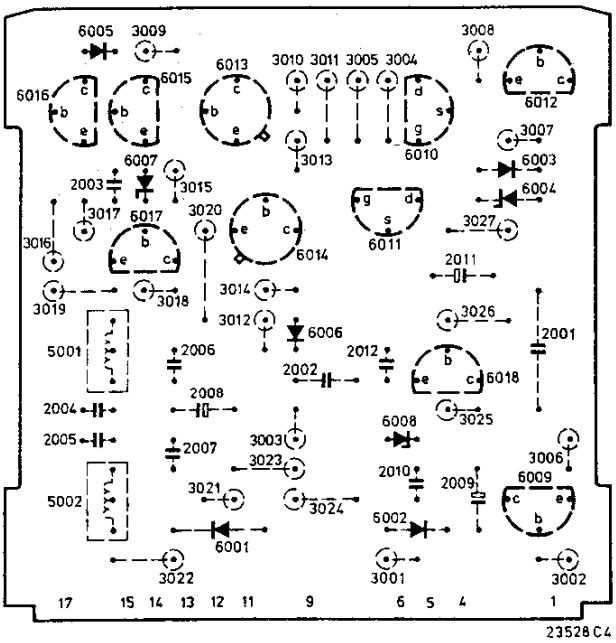

FOR SERVICE MANUALS
CONTACT:
MAURITRON TECHNICAL SERVICES
www.mauritron.co.uk
TEL: 01844 - 351694
FAX: 01844 - 352554

CS 78 536

2...	3...	3...	5...	6...
	3026	3013		
2007	3025	3012		
2016	3023		5005	
2015				
2014		3011		
2008	3014			6012
2009				
2013	3003	3021	5006	
		3015		
2005			5007	
2020			5004	
2010				
		3009		
2006		3018		
		3010		
	3020	3008	5002	
2012		3019	5003	
		3017		
2011				
2002				
2003	3031			
2019		3007		6006
2004	3033	3006		
		3016		
2018		3024		6003
2001		3005	5001	
2021				6007
				6008
	3028			
2017	3032			
	3030	3004		
	3002	3027		6001
	3001			
	3029	3022		6002

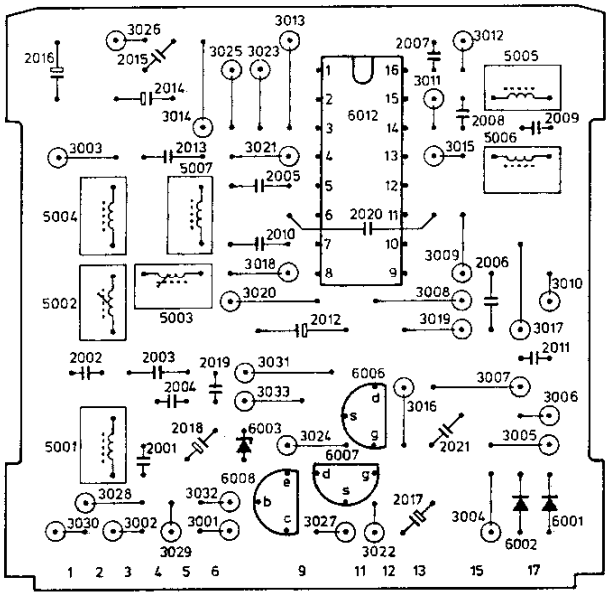

2...	3...	3...	5...	6...
	3013			
	3012	3026		
2007		3023		
2016		3025	5005	
2015				
	3011			
2014				
2009		3014		6012
2008				
2013	3015	3003	5006	
	3021			
2005			5007	
2020			5004	
2010				
	3009			
2006	3018			
	3010			
	3008	3020		
			5002	
	3019		5003	
2012	3017			
2011				
2003				
2002		3031		
2019	3007			6006
2004		3033		
	3006			
	3016			
				6003
2018	3005			
2021	3024		5001	
2001				6007
				6008
		3032		
2017		3028		
	3004	3001		
	3027	3002		6001
		3030		
	3022	3029		6002

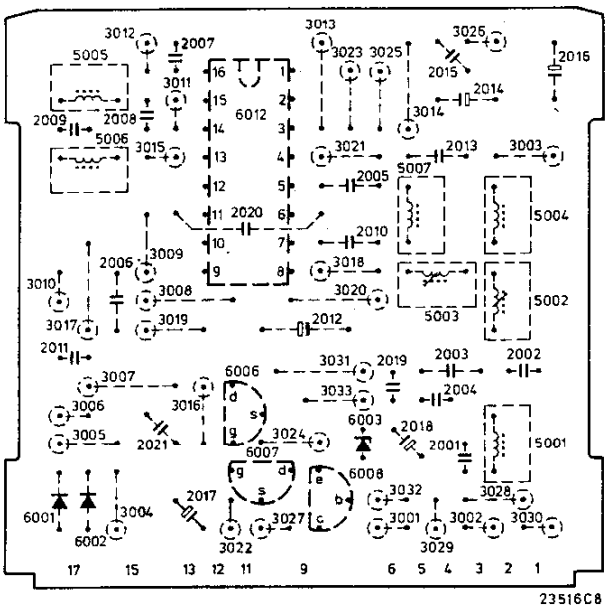

23516C8

U1009 SOUND DEMODULATOR 1

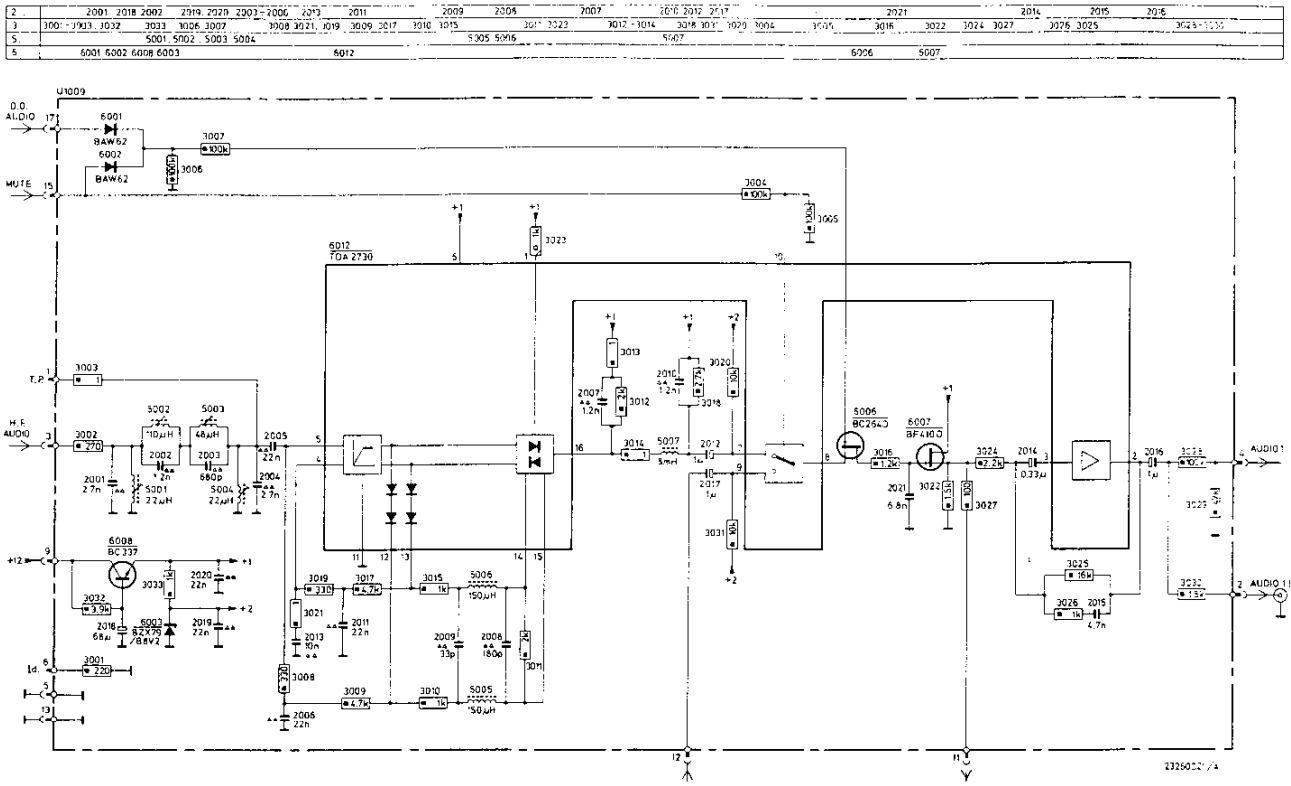

TDA2730		4822 209 80565
BC264D		5322 130 44656
BC337		4822 130 40855
BF410D		4822 130 41697
BAW62		4822 130 30613
BZX79/B8V2		4822 130 34382
5001,5004	22 µH	4822 156 10517
5002	110 µH	4822 156 10519
5003	48 µH	4822 156 10525
5005, 5006	150 µH	4822 156 10535
5007	8 mH	4822 156 20928

2012,2016, 2017	1 µF - 63 V	4822 124 20722
2014	0.33 µF - 63 V	4822 124 20718
2018	68 µF - 16 V	4822 124 20689
2015	4.7 nF - 63 V	4822 121 50539
2021	6.8 nF - 63 V	4822 121 50538

FOR SERVICE MANUALS
CONTACT:
MAURITRON TECHNICAL SERVICES
www.mauritron.co.uk
TEL: 01844 - 351694
FAX: 01844 - 352554

U1010 SOUND DEMODULATOR 2

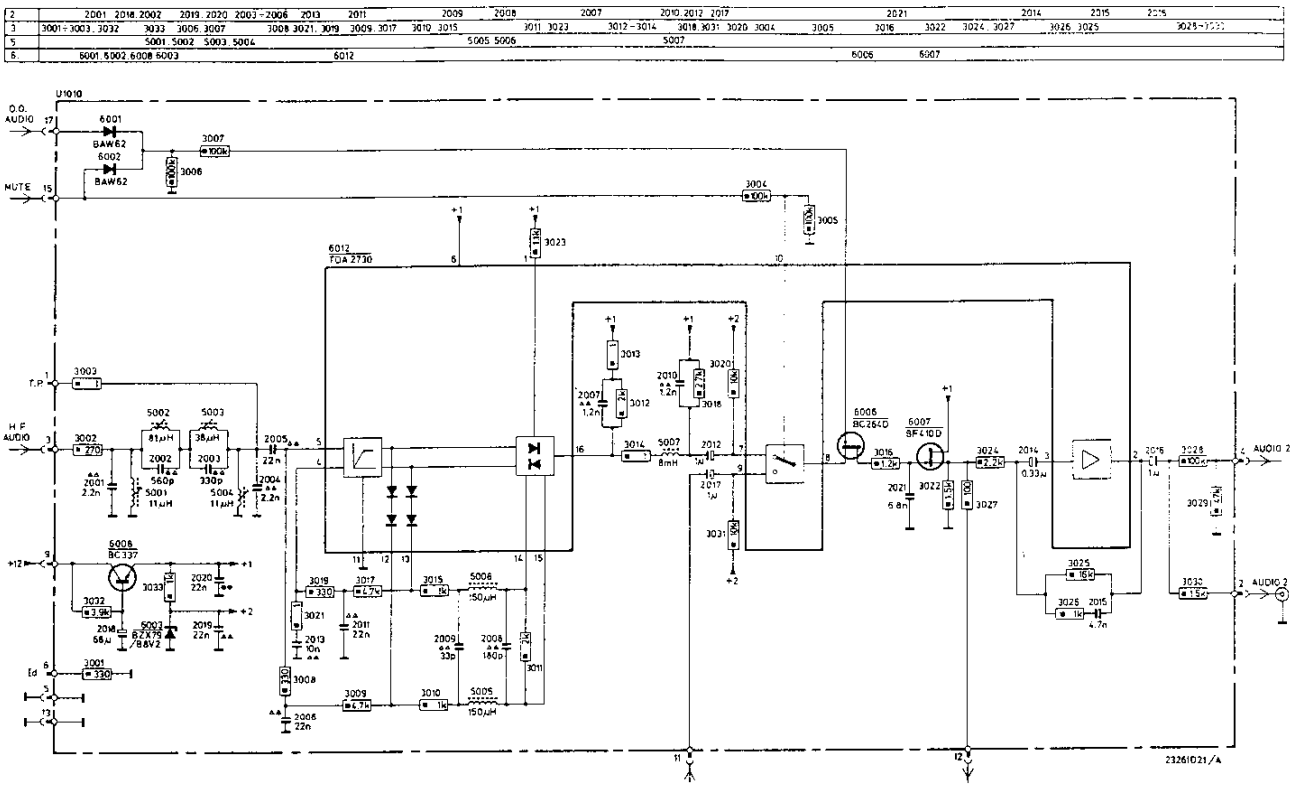

TDA2730			4822 209 80565
BC264D			5322 130 44656
BC337			4822 130 40855
BF410D			4822 130 41697
BAW62			4822 130 30613
BZX79/B8V2			4822 130 34382
5001,5004	11 µH		4822 156 10526
5002	81 µH		4822 156 10527
5003	38 µH		4822 156 10532
5005,5006	150 µH		4822 156 10535
5007	8 mH		4822 156 20928
2012,2016, 2017	1 µF · 63 V		4822 124 20722
2014	0.33 µF · 63 V		4822 124 20718
2018	68 µF · 16 V		4822 124 20689
2015	4.7 nF · 63 V		4822 121 50539
2021	6.8 nF · 63 V		4822 121 50538

2...	3...	3...	5...	6...
	3026	3013		
2007	3025	3012		
2016	3023		5005	
2015				
2014		3011		
2008	3014			6012
2009				
2013	3003	3021	5006	
		3015		
2005			5007	
2020			5004	
2010				
2006		3009		
		3018		
		3010		
	3020	3008	5002	
2012		3019	5003	
		3017		
2011				
2002				
2003	3031			
2019		3007		6006
2004	3033	3006		
		3016		
2018		3024		6003
2001		3005	5001	
2021				6007
2017				6008
	3028			
	3032			
	3030	3004		
	3002	3027		6001
	3001			
				6002
	3029	3022		

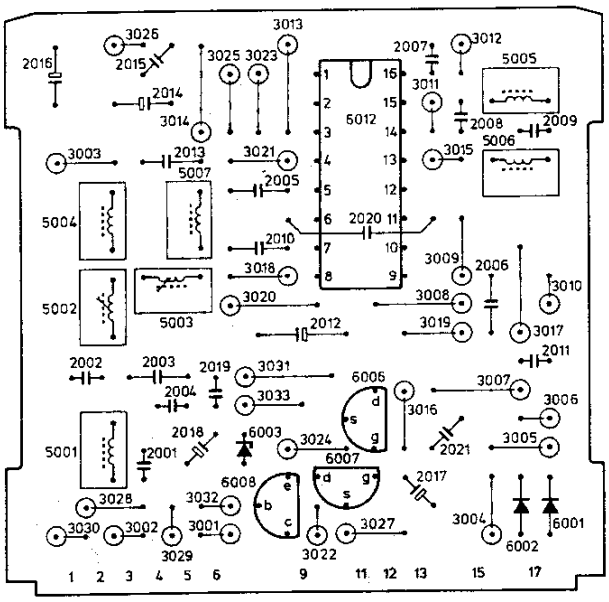

2...	3...	3...	5...	6...
	3013	3026		
	3012	3023		
2007		3025	5005	
2016				
2015				
2014	3011			
2009		3014		6012
2008				
2013	3015	3003	5006	
	3021			
2005			5007	
2020			5004	
2010				
	3009			
2006	3018			
	3010			
	3008	3020		
			5002	
	3019		5003	
2012	3017			
2011				
2003				
2002		3031		
2019	3007			6006
2004		3033		
	3006			
	3016			6003
2018	3005			
2021	3024		5001	
2001				6007
2017				6008
		3032		
		3028		
	3004	3001		6001
	3027	3002		
		3030		6002
	3022	3029		

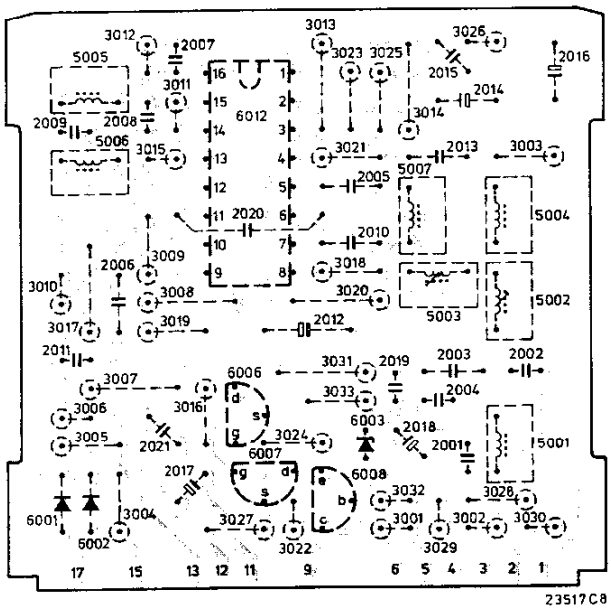

23517C8

FOR SERVICE MANUALS
CONTACT:
MAURITRON TECHNICAL SERVICES
www.mauritron.co.uk
TEL: 01844 - 351694
FAX: 01844 - 352554

CS 78 538

U1011 COLOUR SEPARATOR

2...	2010÷2012 2001 2006.2002.2007 2003 2008.2004.2005 2009
3...	3001 3036 3003 3004÷3006 3017÷3020 3023 3002.3009 3011 3029.3028 3030 3014 3033 3031 3012 3013 3015
	3034 3021 3022 3007 3008 3024÷3027 3010 3032 3016
5...	5001.5002
6...	6008 6004 6005 6009 6001 6010 6017 6011 6012 6006 6007

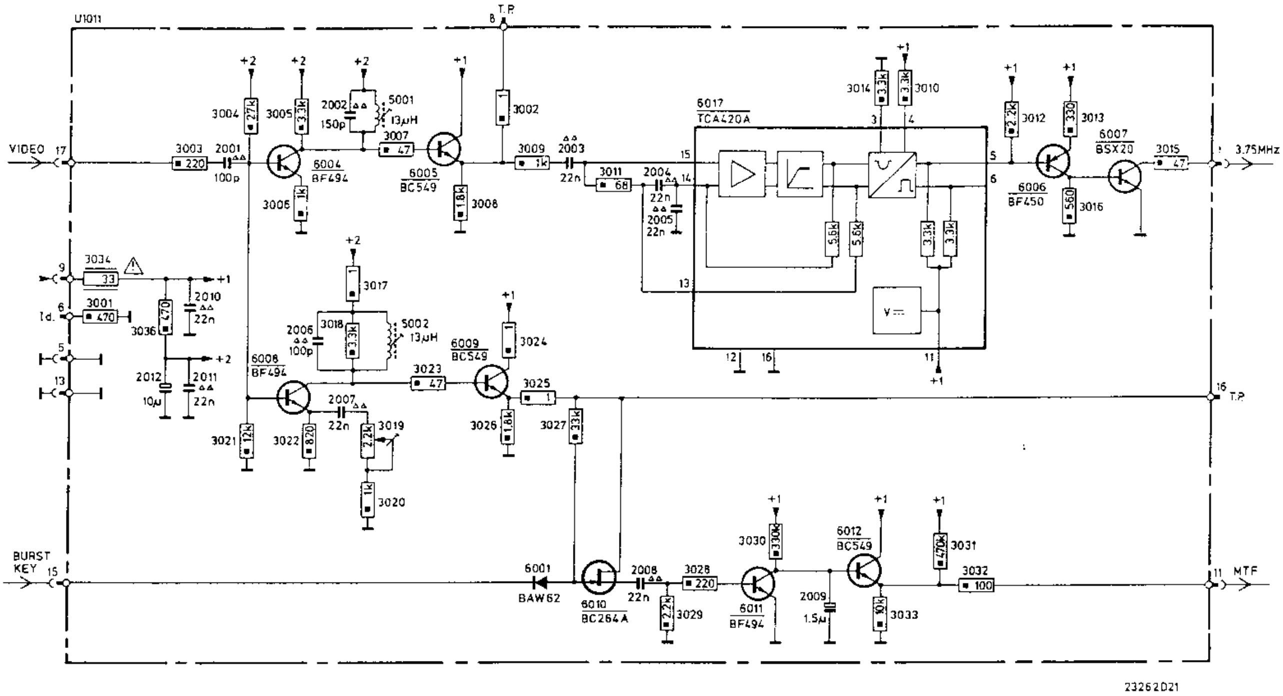

TCA420A	4822 209 80278
BC264A	5322 130 44476
BC549	4822 130 40964
BF450	5322 130 44237
BF494	4822 130 44195
BAW62	4822 130 30613
5001,5002 13 μH	4822 156 20923

3019	2.2 kΩ	4822 100 10027
3034	33 Ω NFR25	4822 111 30522
2009	1.5 μF - 63 V	4822 124 20723
2012	10 μF - 25 V	4822 124 20697

2...	3...	3...	5...	6...
2006	3023 3014	3018		6009
		3019	5002	
2005		3020		
2007 2003 2004 2011 2012	3011 3017	3026 3022		
	3008 3009			6017
	3036			6008
2010 2002		3025 3004	5001	
	3005 3024			6005
	3007 3010	3028 3029		6006 6004
	3012	3006		6010 6011
	3030 3013	3021		
2008	3016	3027		
2009	3002			
2001	3015	3003 3031		6012 6001
	3001 3034	3033 3032		6007

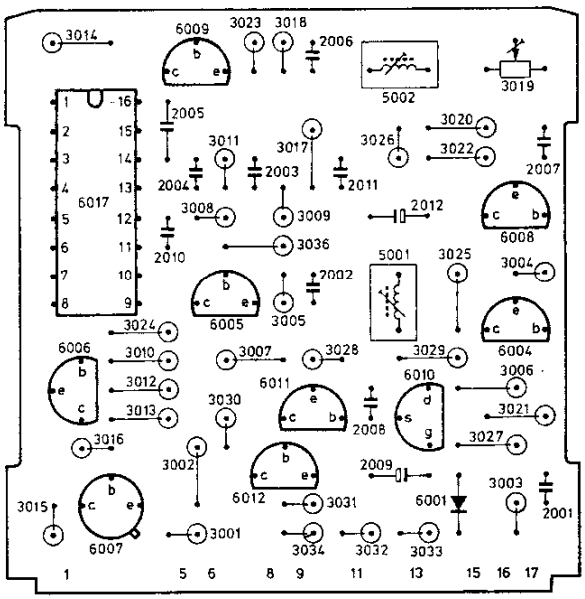

2...	3...	3...	5...	6...
2006	3018	3023 3014		6009
	3019		5002	
2005	3020			
2007 2003 2004 2011 2012	3026 3022	3011 3017		
		3008 3009		6017
		3036		6008
2010 2002	3025 3004		5001	
		3005 3024		6005
	3028 3029	3007 3010		6006 6004
	3006	3012		6010 6011
		3030 3013		
	3021			
2008	3027	3016		
2009		3002		
2001	3003 3031	3015		6012 6001
		3001		
	3033 3032	3034		6007

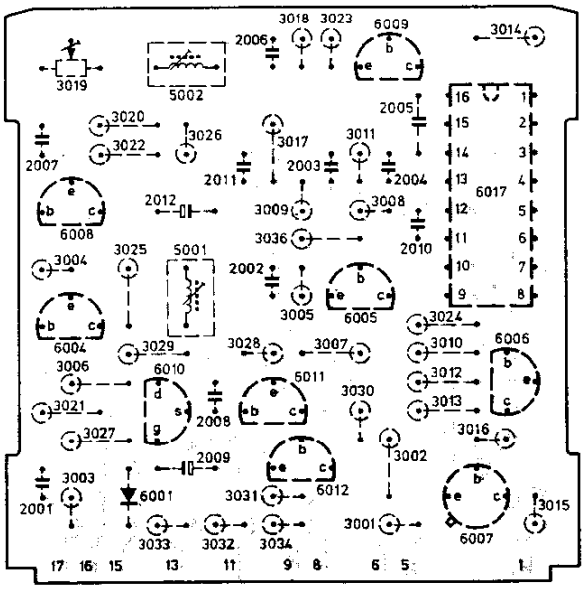

23518C4

FOR SERVICE MANUALS
CONTACT:

MAURITRON TECHNICAL SERVICES

www.mauritron.co.uk
TEL: 01844 - 351694
FAX: 01844 - 352554

U1012 REFERENCE CONTROL

2...	2001 2002 2003 2018 2019 2017 2004 2005 2006 2012 2013 2007···2011 2014···2016
3...	3001 3034 3035 3036 3024 3029 3025 3026 3028 3014 3019 3015 3013 3011 3021 3012 3033
3...	3003 3002 3004 3005 3006 3007 3008 3009 3030 3018 3016 3027 3017 3010 3022 3020 3023 3032 3031
5...	5001
6...	6004 6005 6011 5003 6007 6008 6002 6006 6009 6001

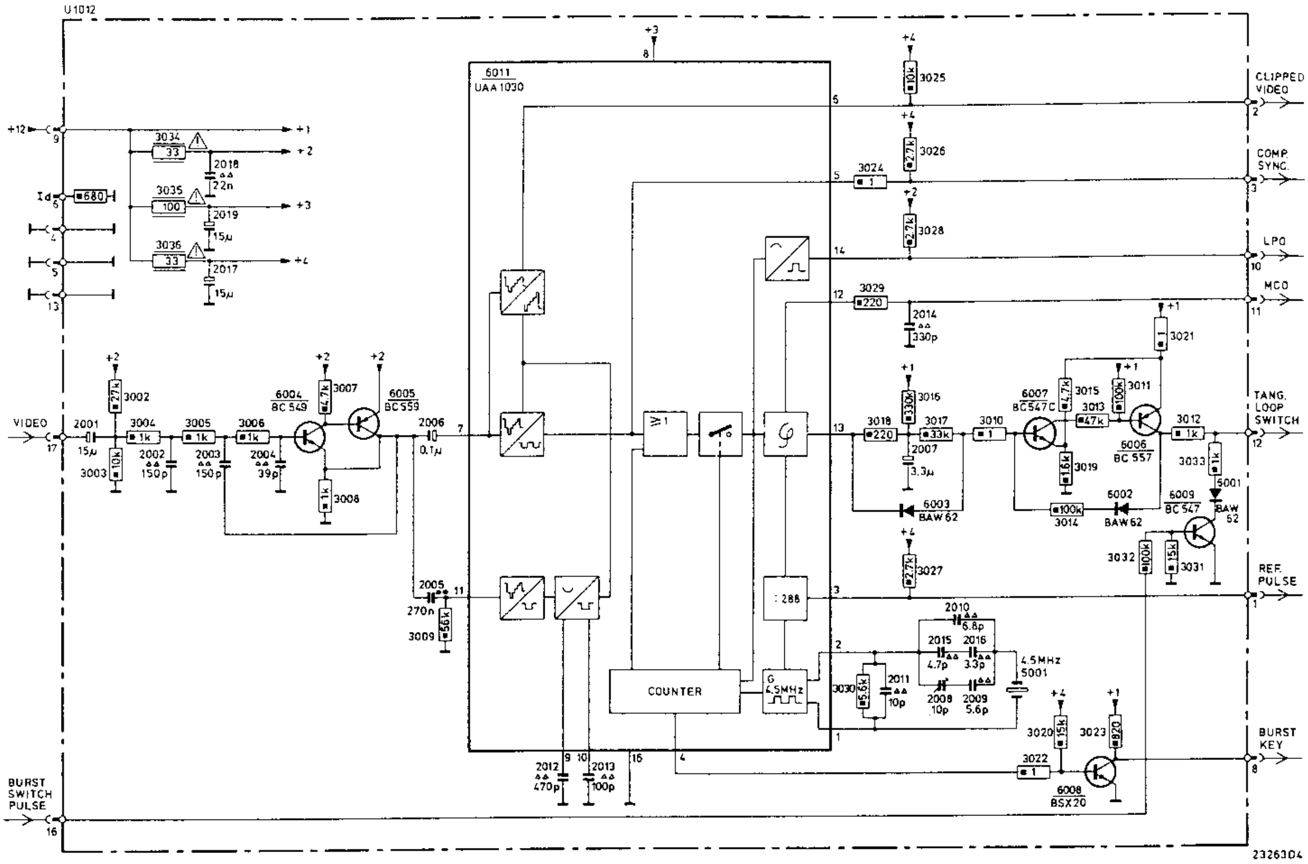

UAA1030	4822 209 80794

BC547	4822 130 44257
BC547C	4822 130 44503
BC549	4822 130 40964
BC557	4822 130 44256
BC559	4822 130 40963
BSX20	5322 130 40417

BAW62	4822 130 30613

5001	4.5 MHz	4822 242 70361

3034,3036	33 Ω NFR25	4822 111 30522
3035	100 Ω NFR25	4822 111 30535

2001,2017, 2019	15 μF - 16 V	4822 124 20977
2006	0.1 μF - 40 V	4822 124 10203
2007	3.3 μF - 16 V	4822 124 20947

2008	10 pF	4822 125 50026

2...	3...	3...	5...	6...
2016 2015 2004 2010 2006 2009 2011 2005 2008 2018 2003 2007 2013 2012 2002 2001 2019 2017 2014	3030 3009 3028 3018 3017 3020 3036 3026 3035 3025 3023 3027 3001	3007 3008 3006 3002 3005 3010 3003 3019 3014 3004 3029 3034 3015 3013 3016 3021 3012 3011 3033 3031 3032	5001	6005 6004 6003 6011 6007 6001 6002 6006 6009 6008

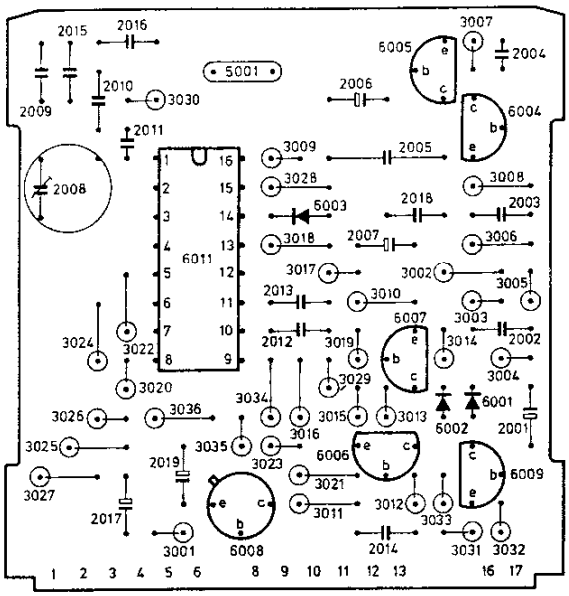

2...	3...	3...	5...	6...
2016 2015 2004 2010 2006 2009 2011 2005 2008 2018 2003 2007 2013 2012 2002 2001 2019 2017 2014	3007 3008 3006 3002 3005 3010 3003 3019 3014 3004 3029 3034 3015 3013 3016 3021 3012 3011 3033 3031 3032	3030 3009 3028 3018 3017 3024 3022 3020 3036 3026 3035 3025 3023 3027 3001	5001	6005 6004 6003 6011 6007 6001 6002 6006 6009 6008

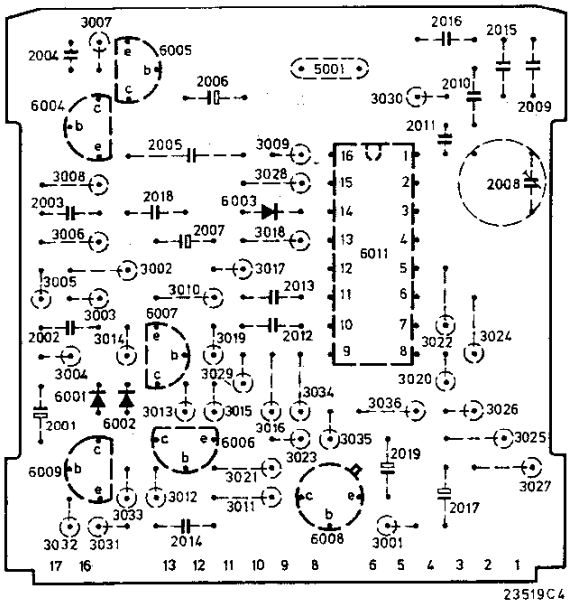

FOR SERVICE MANUALS
CONTACT:
MAURITRON TECHNICAL SERVICES
www.mauritron.co.uk
TEL: 01844 - 351694
FAX: 01844 - 352554

CS 78 540

U1013 SAMPLE DETECTOR

2 . . .	2010 . 2001 . 2006 . 2008 2004 2009 2003 2005 2002 2007
3 . . .	3001 . 3004 . 3014÷3017 3018 3011 3010 3009 3007 . 3008 3013 3005 3003 3002 . 3006 3012
6 . . .	6002 6003 . 6009 . 6013A 6008 6013B 6007 6001 6006 6012

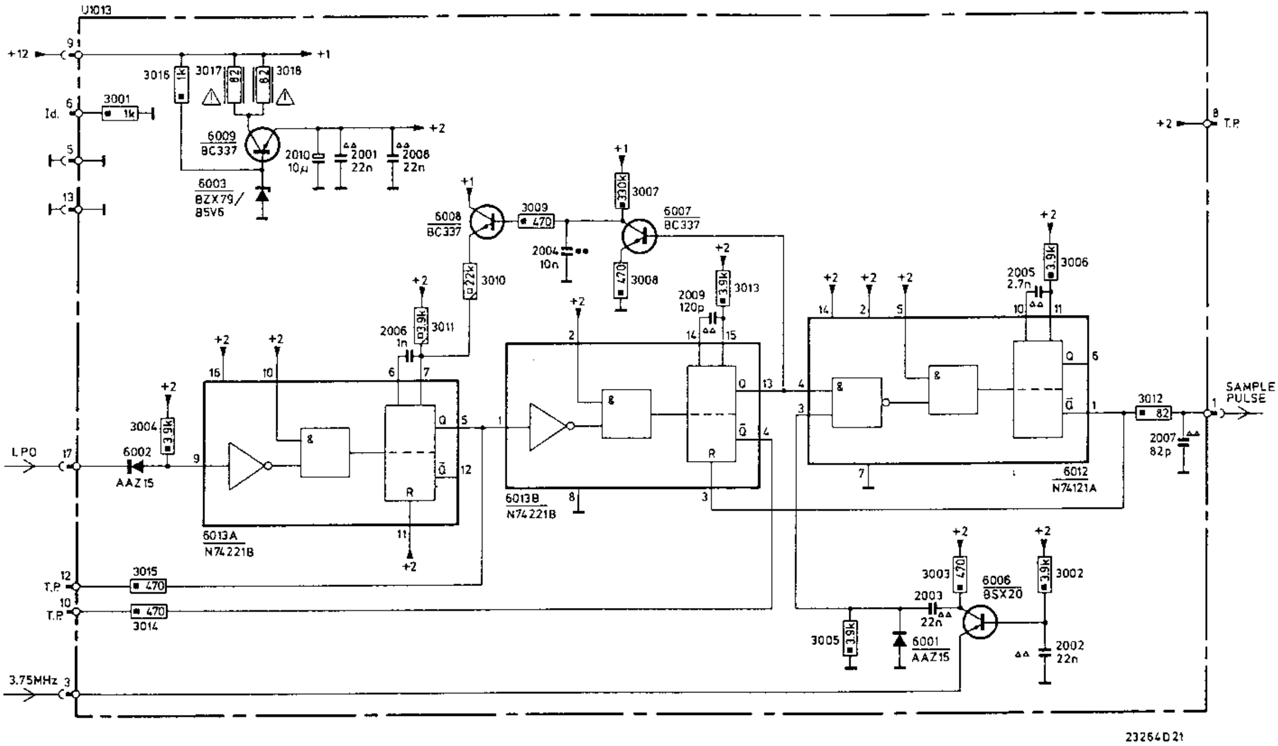

N74121A	5322 209 84017		3017,3018	82 Ω NFR25	4822 111 30533
N74221B	5322 209 85529				
BC337	4822 130 40855		2010	10 μF - 25 V	4822 124 20697
BSX20	5322 130 40417				
AAZ15	4822 130 30229		2006	1 nF	4822 121 50566
BZX79/B5V6	4822 130 34173				

2...	3...	3...	6...
2005	3006		
2010			
2008	3012		
			6001
			6012
		3008	
2003		3005	6007
			6006
	3013		
2009	3003	3004	6002
	3002		
2002			
2001			6013
2004			
	3011		6009
2006			
			6003
	3018	3007	
	3016		
2007	3017	3010	
	3014	3009	6008
		3015	
	3001		

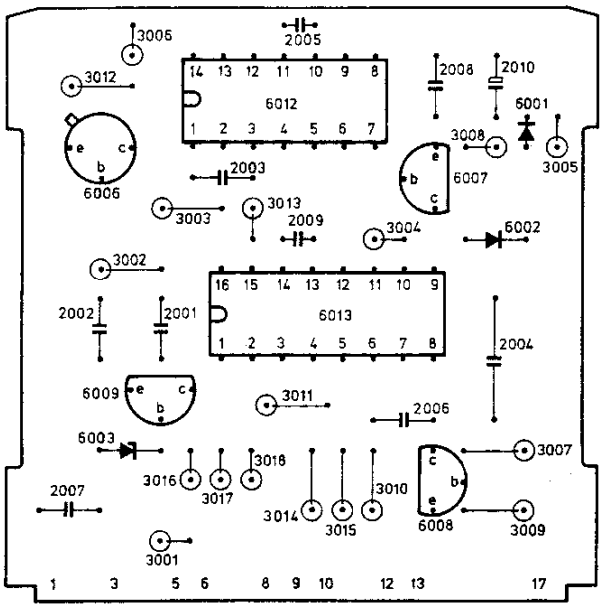

2...	3...	3...	6...
2005		3006	
2010			
2008		3012	
			6012
			6001
	3008		
2003	3005		6007
		3013	6006
		3003	
2009	3004		6002
		3002	
2002			
2001			6013
2004			
		3011	6009
2006			
			6003
	3007	3018	
		3016	
2007	3010	3017	
		3014	
	3009		6008
	3015		
		3001	

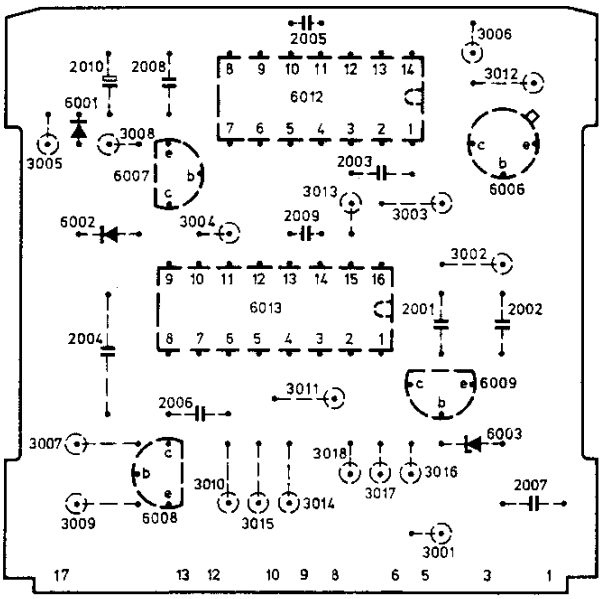

23520C4

FOR SERVICE MANUALS
CONTACT:
MAURITRON TECHNICAL SERVICES
www.mauritron.co.uk
TEL: 01844 - 351694
FAX: 01844 - 352554

U1014 TANGENTIAL PHASE DETECTOR

2...	2006 2009.2014.2002.2010.2015.2003 2007.2001.2012.2016.2004.2013.2017.2005 2008.2018 2011 2019
3...	3001 3002.3003.3008.3005 3004 3009 3014.3017 3010 3012.3018 3013.3019.3015
	3007.3012.3011.3016 3006
6...	6002 6005.6012.6003.6004 6006.6001 6017 6013 6007.6008 6018

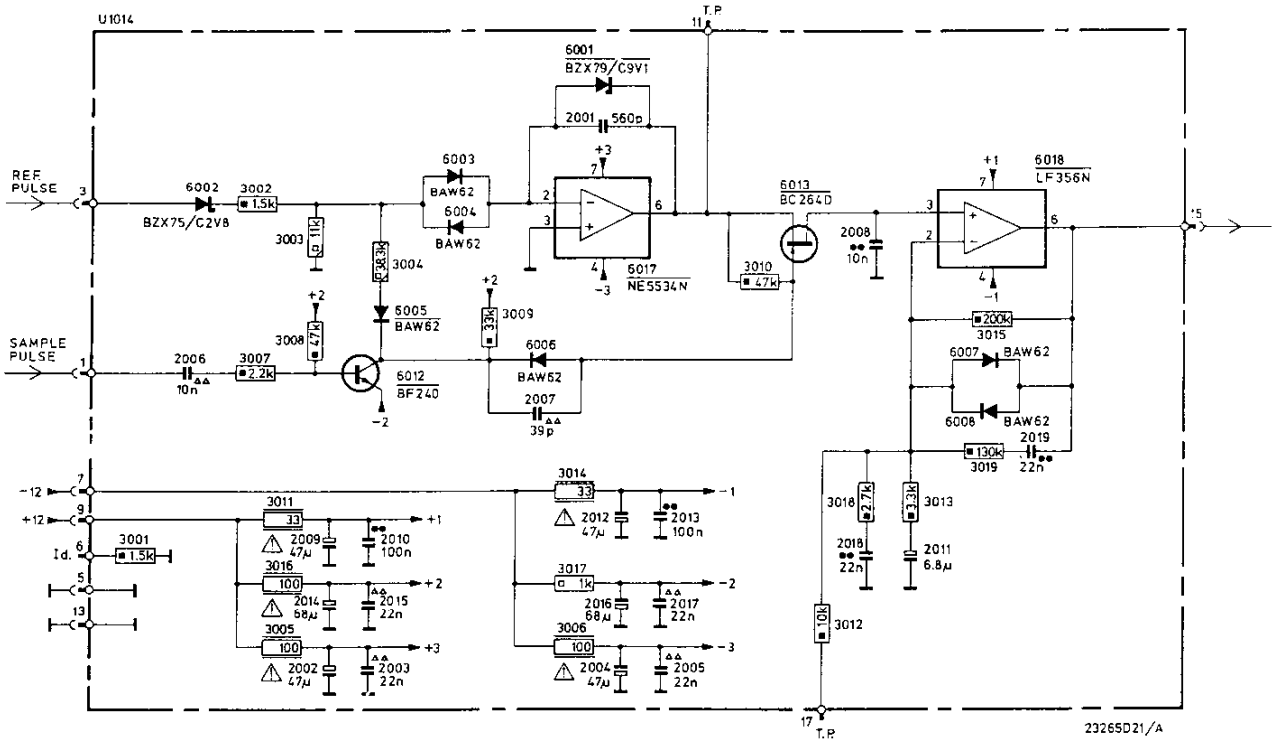

LF356N		5322 209 86422
NE5534N		5322 209 86285
BC264D		5322 130 44656
BF240		4822 130 40902
BAW62		4822 130 30613
BZX75/C2V8		4822 130 34048
BZX79/C9V1		4822 130 30862
3005,3006, 3016	100 Ω NFR25	4822 111 30535
3011,3014	33 Ω NFR25	4822 111 30522
2002,2004, 2009,2012	47 µF - 25 V	4822 124 20699
2011	6.8 µF - 25 V	5322 124 14081
2014,2016	68 µF - 16 V	4822 124 20689
2001	560 pF	5322 121 54131

2...	2...	3...	3...	6...
	2010			
2001	2009			6001 6008 6007
			3019	
			3015	6013 6017
	2019	3010	3011	
		3005		
	2008			
		3006		
2005				
2004				6018
2003	2002		3014	
2007				
	2015 2013			6004 6003 6006
2014		3003	3016	
	2012 2011	3009 3002	3013 3017	6005
2017		3004		
	2016 2018	3008 3007	3018 3012	6002 6012
2006		3001		

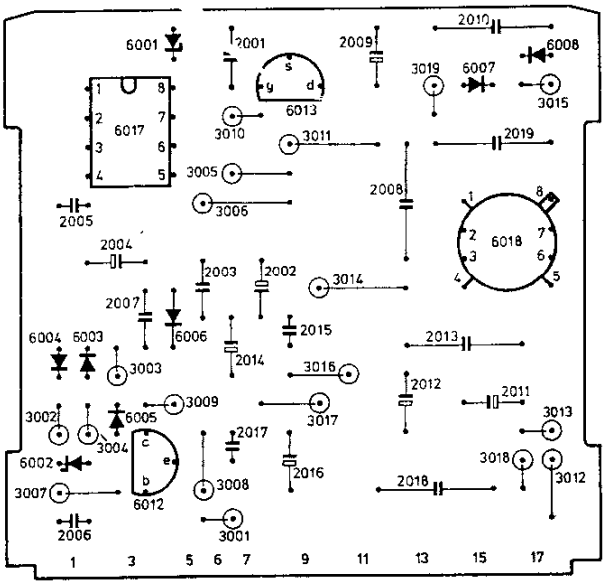

2...	2...	3...	3...	6...
2010				
2009	2001			6001 6008 6007
		3019		
		3015		6013 6017
2019		3011	3010	
			3005	
2008				
	2005		3006	
	2004			6018
2002	2003	3014		
	2007			
2015 2013				6004 6003 6006
	2014	3016	3003	
2012 2011			3009 3002	
		3013 3017		6005
	2017			
		3018	3004	6002
2016 2018		3012	3008 3007	6012
	2006		3001	

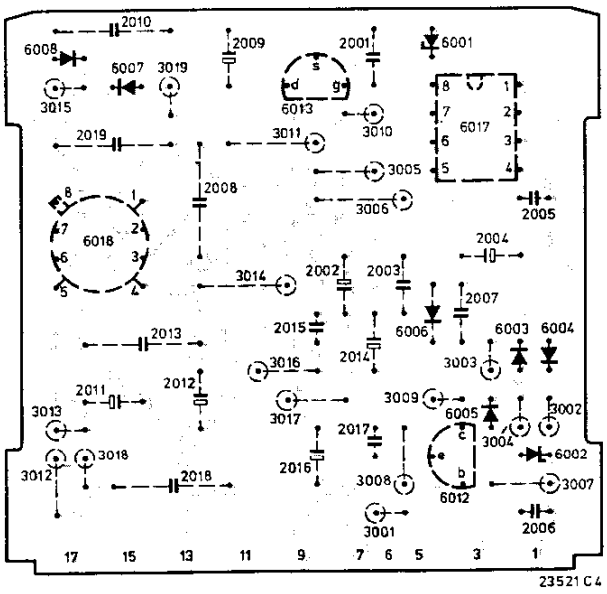

FOR SERVICE MANUALS
CONTACT:
MAURITRON TECHNICAL SERVICES
www.mauritron.co.uk
TEL: 01844 - 351694
FAX: 01844 - 352554

CS 78 542

2...	3...	3...	6...	6...
		3023		
	3035	3011		
	3028		6021	6007
2008			6008	
			6020	6006
		3021		
2012	3034	3014		
	3018			
	3017			6019
2013			6025	6009
	3012	3013		
2005	3010	3007		6005
			6010	6011
				6004
2014		3026	6018	
2009				6026
		3020		
2003				
2010	3005			
2007	3008			
	3006	3031		
2004	3025	3016	6003	
2015		3015		
			6001	
2011		3024	6002	6012
	3002	3027		
2001				
	3003			
2006	3004	3032		
	3001	3022		
		3019		
	3033			
2002		3009	6017	

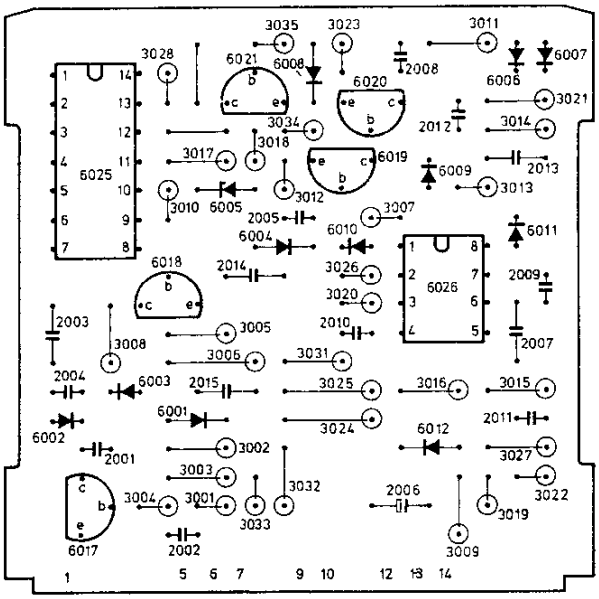

2...	3...	3...	6...	6...
	3023			
	3011	3035		
		3028	6007	6021
2008			6006	6008
				6020
	3021			
		3034		
2012	3014			
		3018		
		3017	6019	
2013			6009	6025
	3013	3012	6005	
2005	3007	3010		
			6011	6010
			6004	
2014	3026			6018
2009				
	3020		6026	
2003				
2010		3005		
		3008		
2007	3031	3006		
2004	3016			
2015	3015	3025		6003
				6001
2011	3024		6012	6002
		3002		
2001	3027			
		3003		
2006	3032	3004		
	3022	3001		
	3019			
		3033		
2002	3009			6017

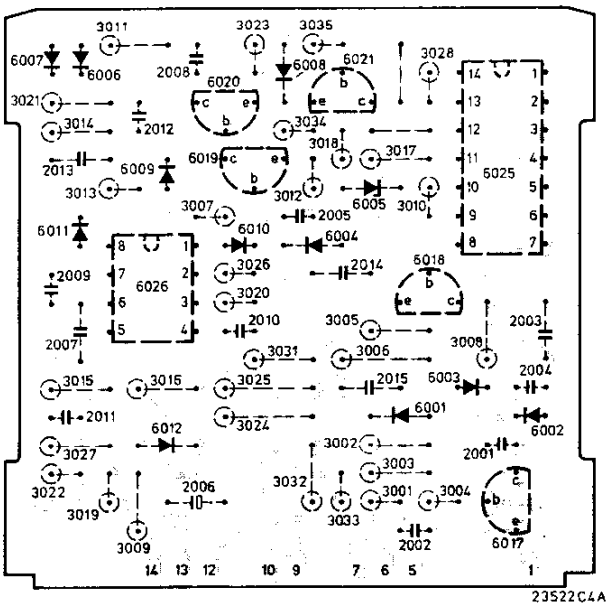

23522C4A

T

U1015 SEARCH ADAPTER

2...	2005.2001.2002.2014.2015 2004.2008 2006 2007.2010.2011 2009 2012.2013
3...	3007.3001÷3003.3004.3018.3011 3005 3035.3006.3008 3010 3013÷3016 3024 3022 3025÷3027.3021 3031
	3017.3032.3033.3034.3012.3028 3009.3023 3019 3020
6...	6017.6004 6019.6001.6002.6021.6005.6003.6020.6008 6018.6006.6007 6026B 6025A.B.6026A 6009÷6012

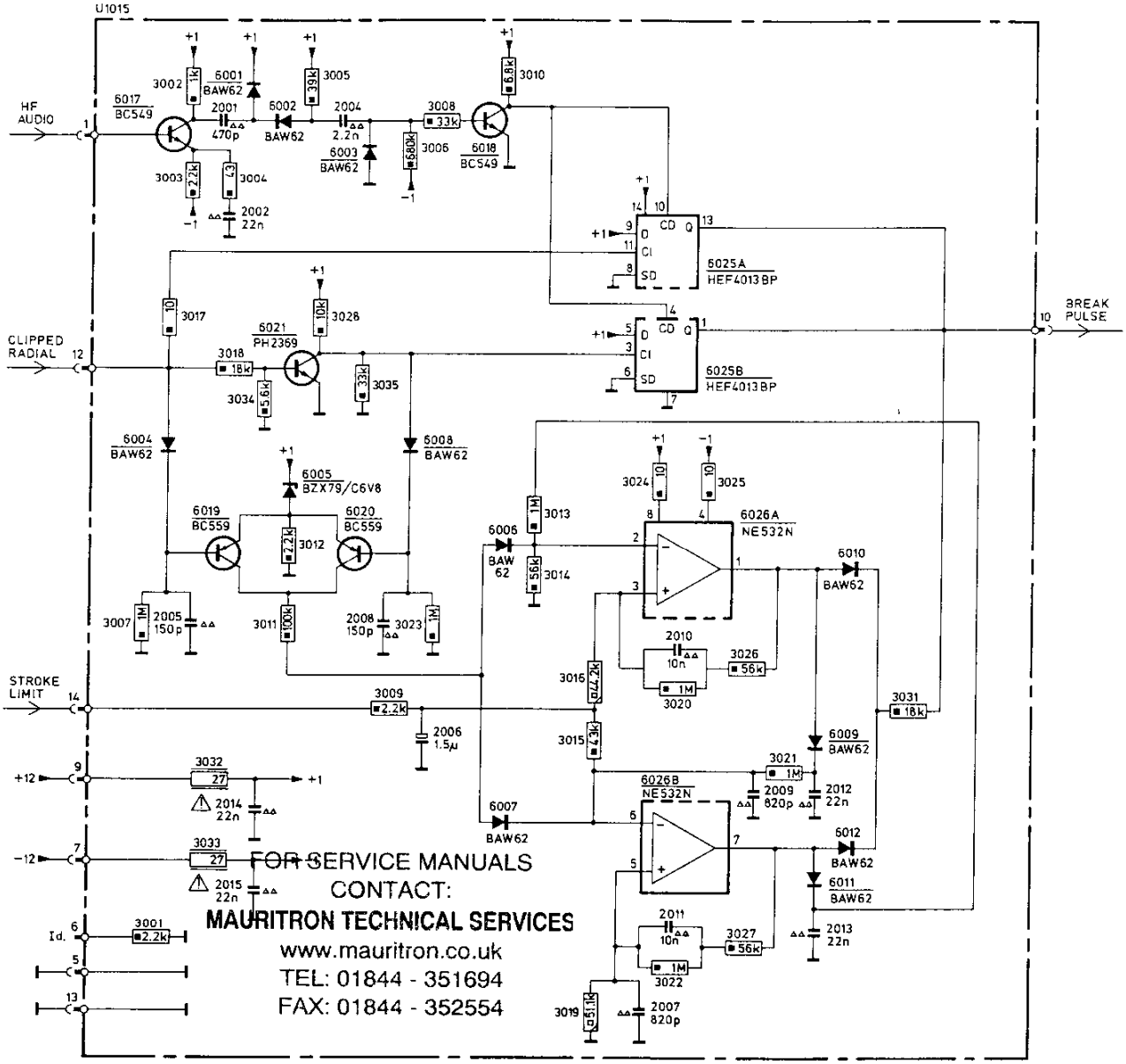

23266D21/A

IC				
HEF4013BP	5322 209 10002		3032,3033	27 Ω NFR25	4822 111 30519
NE532N	4822 209 80818				
			2006	1.5 μF - 25 V	4822 124 20942
PH2369	4822 130 41594				
BC549	4822 130 40964				
BC559	4822 130 40963				
BAW62	4822 130 30613				
BZX79/C6V8	4822 130 34278				

CS 78 543

U1016 FOCUS DRIVE

2...	2010 2011 2001 2002 2003 2004 2006 2005 2007
3...	3001 3003 3009 3002 3041 3004 3006 3029 3033 3034 3020 3011 3016 3026 ··· 3028 3031 3035 3032
3...	3040 3017 3015 3005 3007 3008 3030 3010 3019 3021 3022 3023 3025 3024
6...	6030a 6001 ··· 6004 6030b 6031a 6027 6008 6012 6007 6011 6009 6025 6021 6022 6010 6026 6023
6...	6005 6006 6014 6020 6031b 6013 6024

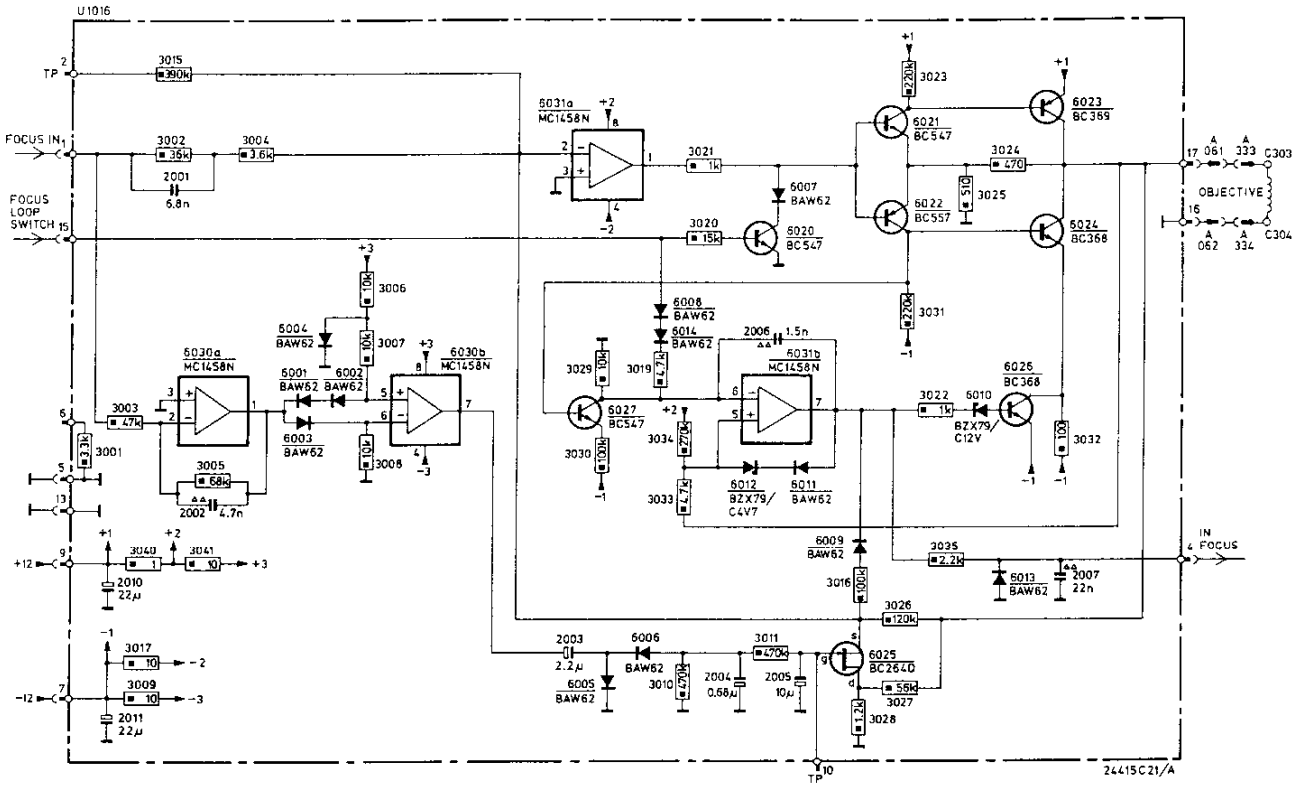

MC1458N		5322 209 85512
BC264D		5322 130 44656
BC368		5322 130 44647
BC369		5322 130 44593
BC547		4822 130 44257
BC557		4822 130 44256

BAW62		4822 130 30613
BZX79/C4V7		4822 130 34174
BZX79/C12		4822 130 34197
2003	22 µF - 25 V	5322 124 14014
2004	0.68 µF - 25 V	5322 124 14039
2005	10 µF - 16 V	5322 124 14066
2010,2011	22 µF - 25 V	4822 124 20698
2001	6.8 nF	4822 121 50538

2...	3...	3...	6...	6...
	3010		6006	6011
	3011			6009
2003				6012
2004				6031
2005			6005	
2006		3016	6004	6025
	3006	3027		
	3028	3033		
		3021	6002	
	3029	3025	6001	
	3034			
	3008	3022		
	3007	3026		6027
	3009	3017	6003	6022
	3030			6021
		3024		
	3031			
			6030	
		3019	6010	
		3023		
	3005			
		3032		
	3015	3041		
			6026	6007
			6024	6023
2002				
	3004			
	3035	3040		6014
	3003	3020		
			6013	
2011	3002			
				6008
2007				
2001				
2010				6020

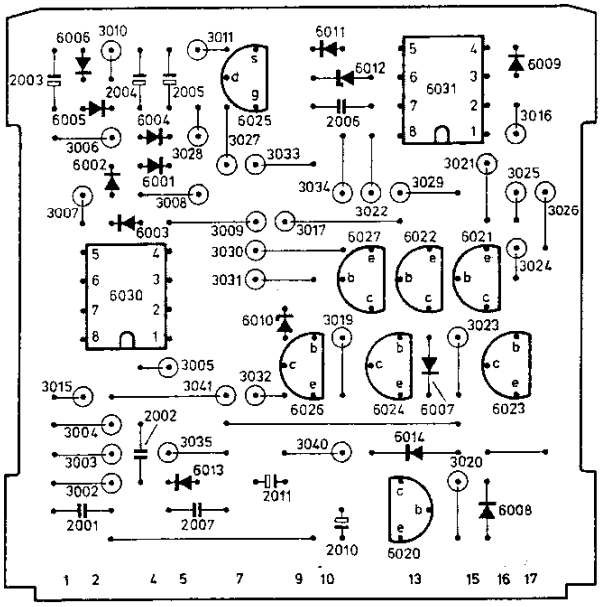

2...	3...	3...	6...	6...
		3010	6011	6006
		3011		
			6009	
2003			6012	
2004				
2005			6031	
2006	3016		6025	6005
	3027			6004
	3033	3006		
	3021	3028		
	3025			
		3029		6002
		3034		6001
	3022	3008		
	3026	3007		
	3017	3009	6027	6003
		3030	6022	
			6021	
	3024	3031		
				6030
	3019			6010
	3023			
		3005		
	3032			
	3041	3015		
			6007	6026
			6023	6024
2002		3004	6014	
	3040	3035		
	3020	3003		
				6013
		3002		
2011				
			6008	
2007				
2001				
2010				
			6020	

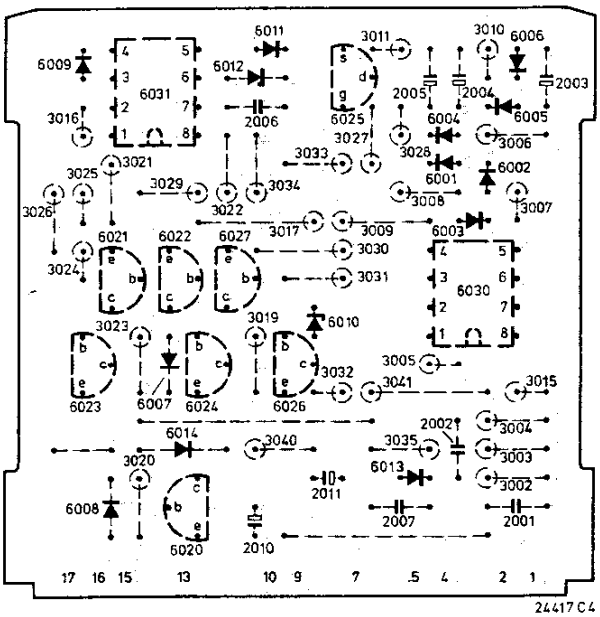

24417 C4

FOR SERVICE MANUALS
CONTACT:
MAURITRON TECHNICAL SERVICES
www.mauritron.co.uk
TEL: 01844 - 351694
FAX: 01844 - 352554

CS 78 544

U1017 RADIAL DRIVE

2	2009 2002 2001 2003 2004 2005 2006 2007 2008
3	3006 3007 3004 3005 3011 3014 3015 3016 3017 3018 3019 3020 3021 3028 ··· 3032 3033 3034 3035
3	3001 3002 3003 3008 3010 3012 3009 3013 3022 ··· 3027
6	6015 6009 6001 ··· 6004 6010 6011 6016 6013 6012

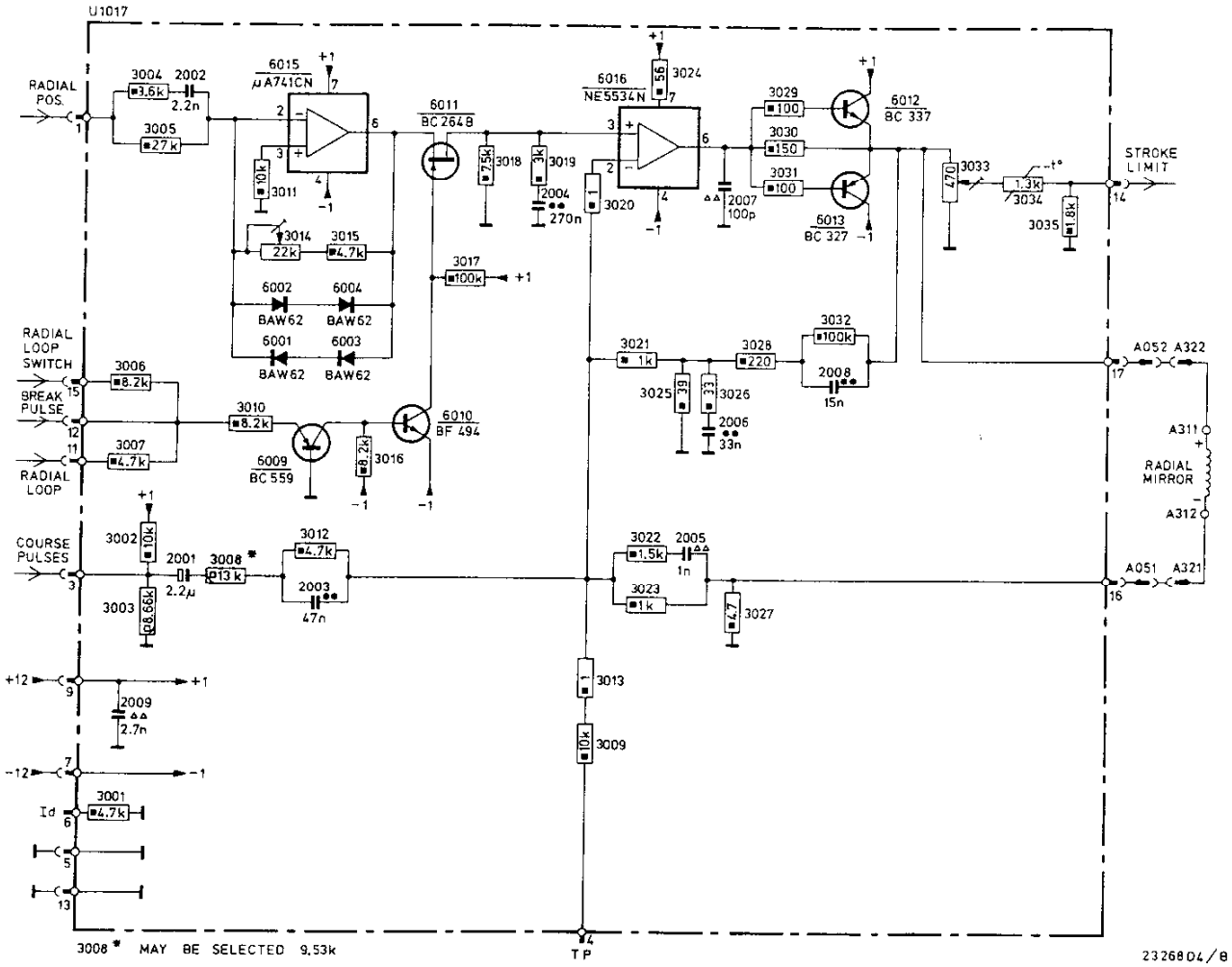

NE5534N	5322 209 86285		3014	22 kΩ	5322 101 44041
μA741CN	5322 209 85254		3033	470 Ω	4822 100 10023
BC264B	4822 130 41066		3034	1.3 kΩ N.T.C.	4822 116 30018
BC327	4822 130 40854				
BC337	4822 130 40855				
BC559	4822 130 40963				
BF494	4822 130 44195		2001	2.2 μF · 16 V	4822 124 10204
BAW62	4822 130 30613		2002	2.2 nF	4822 121 50753

CS 78 545

2...	3...	3...	3...	6...
				6012
2009 2007				
			3031	
	3014			
			3033	
2004				6001 6003 6013
		3029	3030	
				6004
2008	3015	3018		
				6002 6016
	3019			
		3028	3032	
				6015 6011
			3027	
		3024 3017	3025	
2005				
	3011			
			3022 3021	6009
		3026 3020		
	3016			
		3012	3023	
2006	3003	3010		6010
2002 2001				
		3008		
2003				
	3001			
			3034 3035	
	3005 3004	3009 3013	3007 3006	

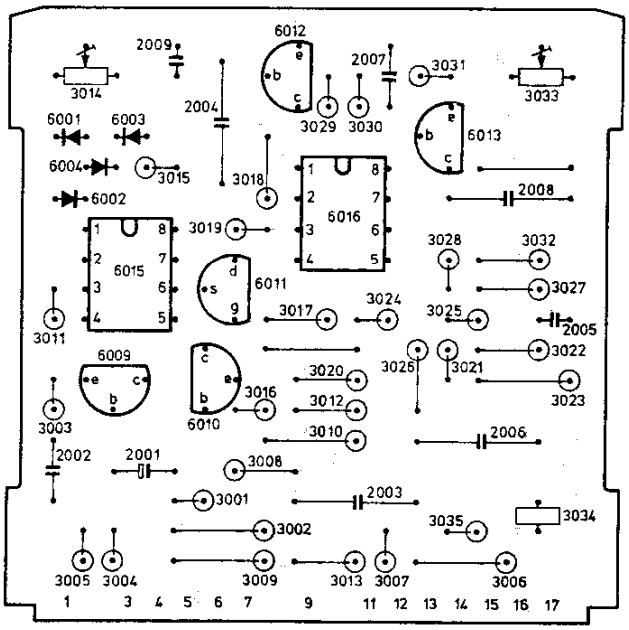

2...	3...	3...	3...	6...
				6012
2009 2007	3031			
2004	3033		3014	6001 6003 6013
	3030	3029		
				6004
2008		3018	3015	
				6002 6016
			3019	
	3032	3028		
				6015 6011
	3027			
	3025	3024 3017		
2005				
			3011	
	3022			6009
	3021	3026 3020		
			3016	
	3023	3012		
2006		3010	3003	6010
2001 2002				
		3008		
2003				
			3001	
	3034 3035			
	3007 3006	3009 3013	3005 3004	

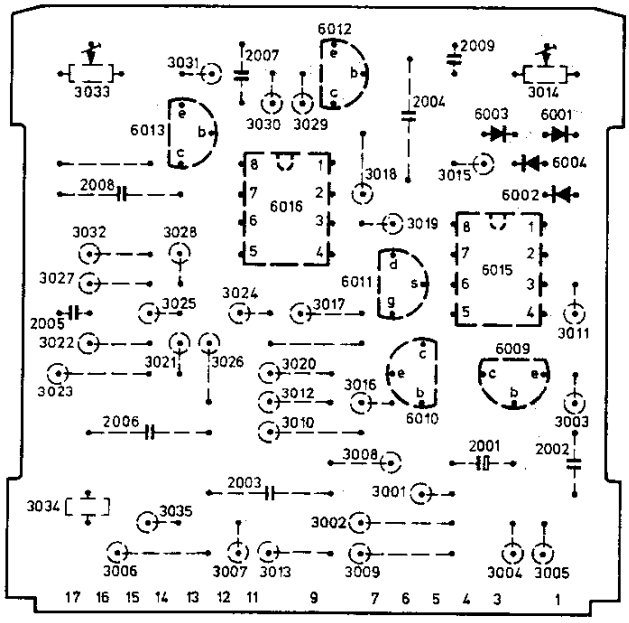

23524C4

FOR SERVICE MANUALS
CONTACT:

MAURITRON TECHNICAL SERVICES

www.mauritron.co.uk
TEL: 01844 - 351694
FAX: 01844 - 352554

U1018 SLIDE DRIVE

2	2001, 2005, 2006 2002, 2003 2004
3	3002, 3007 ÷ 3009, 3021, 3022, 3001, 3003 – 3005 3006 3010 3011 ÷ 3014 3018 ÷ 3020 3016 3015, 3017
6	6001 ÷ 6004, 6012B 6012A 6012C 6005, 6006, 6008, 6009

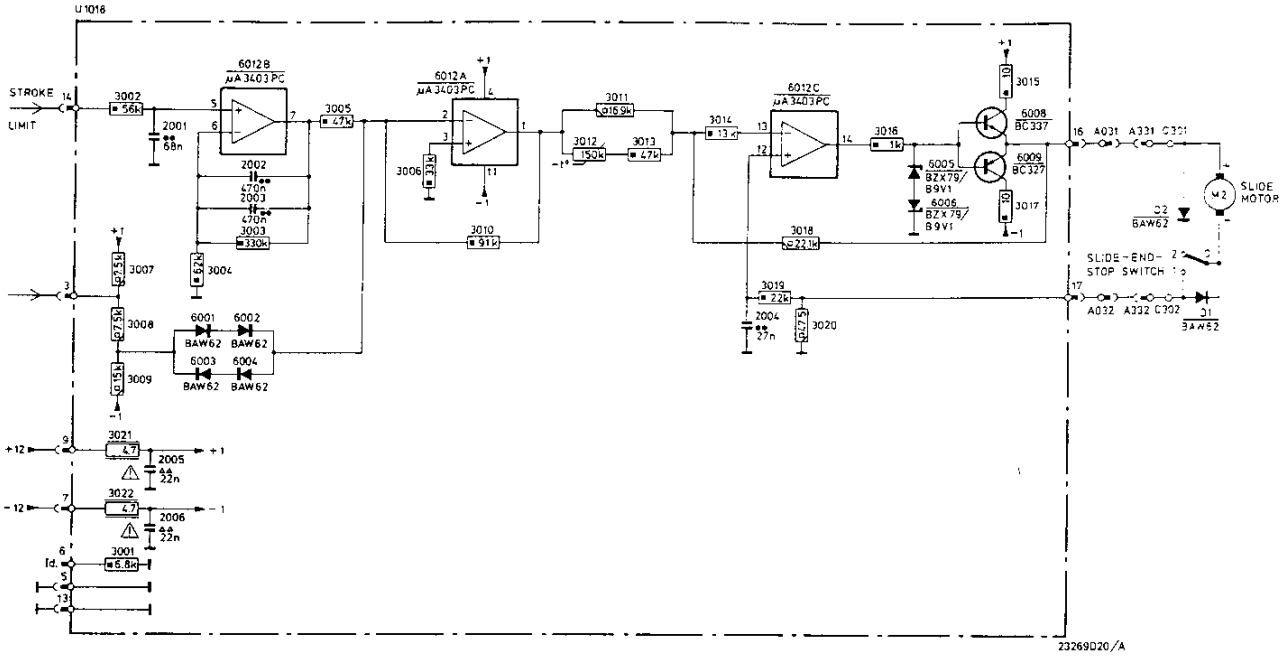

µA3403PC	5322 209 86404	BAW62 BZX79/B9V1	4822 130 30613 4822 130 30862
BC327 BC337	4822 130 40854 4822 130 40855	3012 150 kΩ N.T.C.	4822 116 30198
		3021,3022 4.7 Ω NFR25	4822 111 30499

2...	3...	3...	6...
	3013	3018	
	3011	3014	6005
	3012 3016		6006 6009 6008
		3017	
		3005 3015	6012
2001			
	3010 3004	3003	
			6004
2004	3006		
			6002
2002 2003		3019	6003 6001
	3009 3007		
2005 2006			
	3008	3020	
	3022 3001	3021 3002	

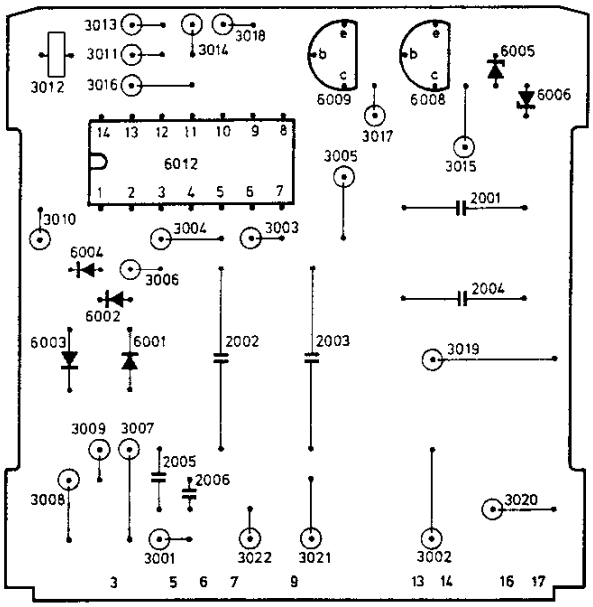

2...	3...	3...	6...
		3013	
	3018		
	3014	3011	6005
		3016 3012	6006 6008 6009
	3017		
	3005 3015		6012
2001			
	3003	3010 3004	
			6004
2004		3006	
			6002 6003 6001
2002 2003	3019		
		3009 3007	
2005 2006			
	3020	3008	
	3021 3002	3022 3001	

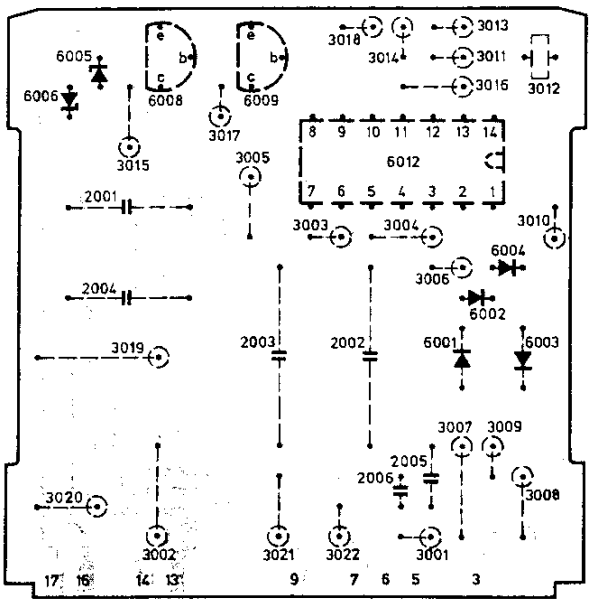

23525C4

FOR SERVICE MANUALS
CONTACT:
MAURITRON TECHNICAL SERVICES
www.mauritron.co.uk
TEL: 01844 - 351694
FAX: 01844 - 352554

CS 78 546

2...	3...	3...	3...	6...
	3026 3015	3020	3019	6011 6013 6001
2004 2008			3013 3009	
		3025 3033	3028 3010 3029	
	3030			6015 6016
			3007	6021
			3008	6010
	3031			
	3034			
2003		3014		6017
	3038		3011	
2010	3037	3035	3006	6004
2012 2002	3039 3032	3042	3016 3003	6012
	3036		3002	
2006	3040	3024		6005 6002
			3012	6018 6006 6014
2001 2009		3018		
		3027		
2007 2013		3004 3023		6009
2014	3041 3021 3022	3001	3005 3017	6007

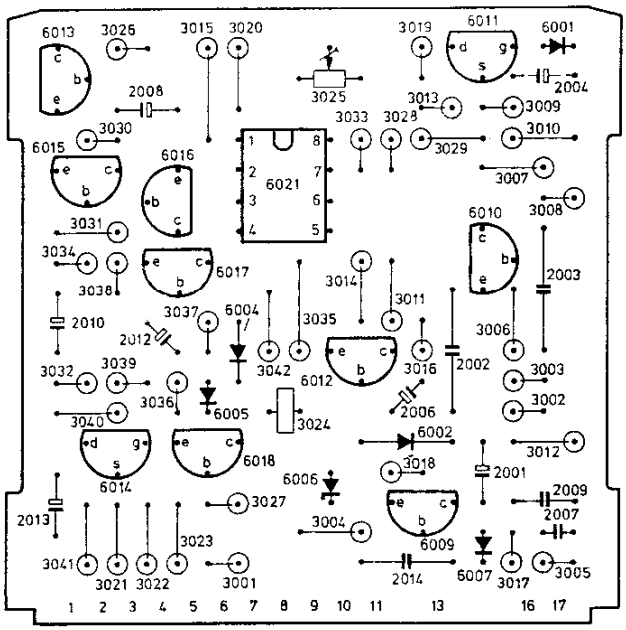

2...	3...	3...	3...	6...
	3019	3020	3026 3015	6011 6013 6001
2004 2008	3013 3009 3028 3010	3025 3033		
	3029		3030	6015 6016
	3007			6021
	3008		3031	6010
			3034	
2003		3014	3038	6017
	3011		3037	6004
2010	3006	3035		
2012 2002	3016 3003	3042	3039 3032	6012
	3002		3036	
2006		3024	3040	6005 6002
	3012	3018		6018 6006 6014
2001 2009				
		3027		
2007 2013		3004 3023		6009
2014	3005 3017	3001	3041 3021 3022	6007

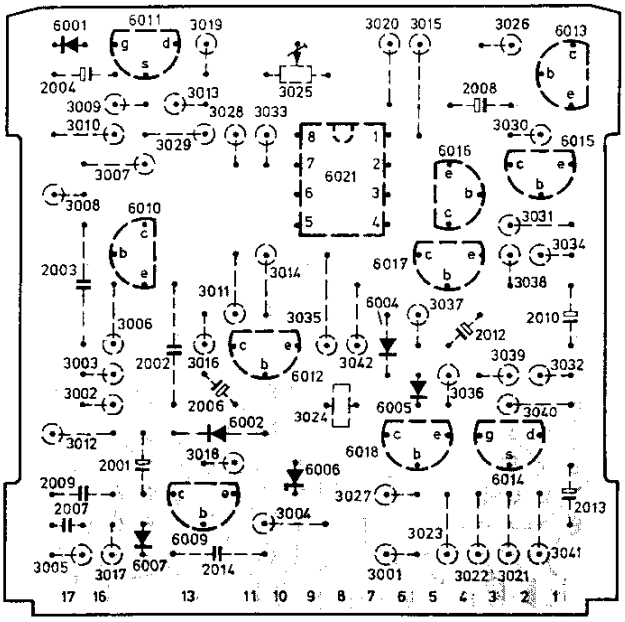

23526C4A

U1019 TANGENTIAL DRIVE

2	2014 2006 2001 2002 2007 2003 2009 2004 2008 2010 2012 2013
3...	3010 3012 3016 3018 3002 3003 3005 3006 3007 3008 3009 3011 3013 3015 3020 3025 3014 3019 3028 3029 3033 3035 3024
3..	3001 3004 3042 3017 3023 3027 3026 3022 3030···3032 3021 3034 3036···3041
6...	6002 6006 6012 6009 6007 6010 6001 6011 6021A 6014 6013 6015 6016 6004 6005 6018 6021B 6017

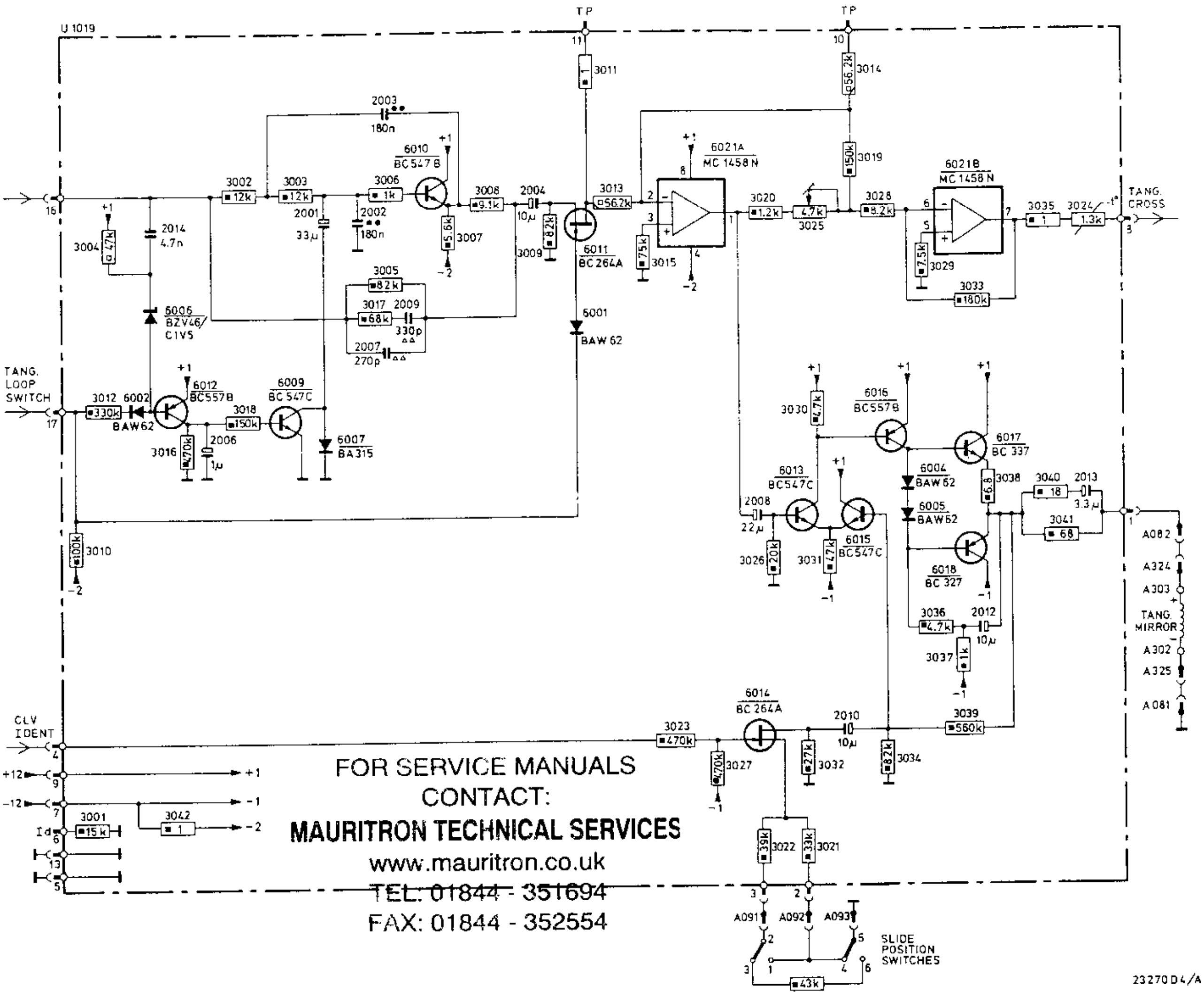

FOR SERVICE MANUALS
CONTACT:
MAURITRON TECHNICAL SERVICES
www.mauritron.co.uk
TEL: 01844 - 351694
FAX: 01844 - 352554

MC1458N		5322 209 85512
BC264A		5322 130 44476
BC327		4822 130 40854
BC337		4822 130 40855
BC547B		4822 130 40959
BC547C		4822 130 44503
BC557B		4822 130 44568
BA315		4822 130 30843
BAW62		4822 130 30613
BZV46/C1V5		5322 130 34865
3025	4.7 kΩ	4822 100 10236
3024	1.3 kΩ N.T.C.	4822 116 30018
2001	33 µF - 16 V	4822 124 20688
2004,2010	10 µF - 16 V	5322 124 14066
2006	1 µF - 63 V	4822 124 20722
2008	22 µF - 10 V	4822 124 20943
2012	10 µF - 25 V	4822 124 20697
2013	3.3 µF - 25 V	5322 124 14067
2014	4.7 nF	4822 121 50539

U1020 SEQUENCE LOGIC

2	2005 2002 2010 2011 2003 2006 2001 2012 2007 2004 2009
3	3001 3019 – 3022 3002 – 3005 3023 – 3025 3026 3028 3029 3030 3031
	3006 3009 3010 3008 3034 3033 3011 3012 3032 3007 3013 – 3015 3016 – 3018
5	5001
6	6006 6015 6016 6007 6002 6017 6018 6022B C D 6008 6009 6010 6019 6011
	6001 6023B 6003 6004 6023C 6005 6023A 6023D 6022A

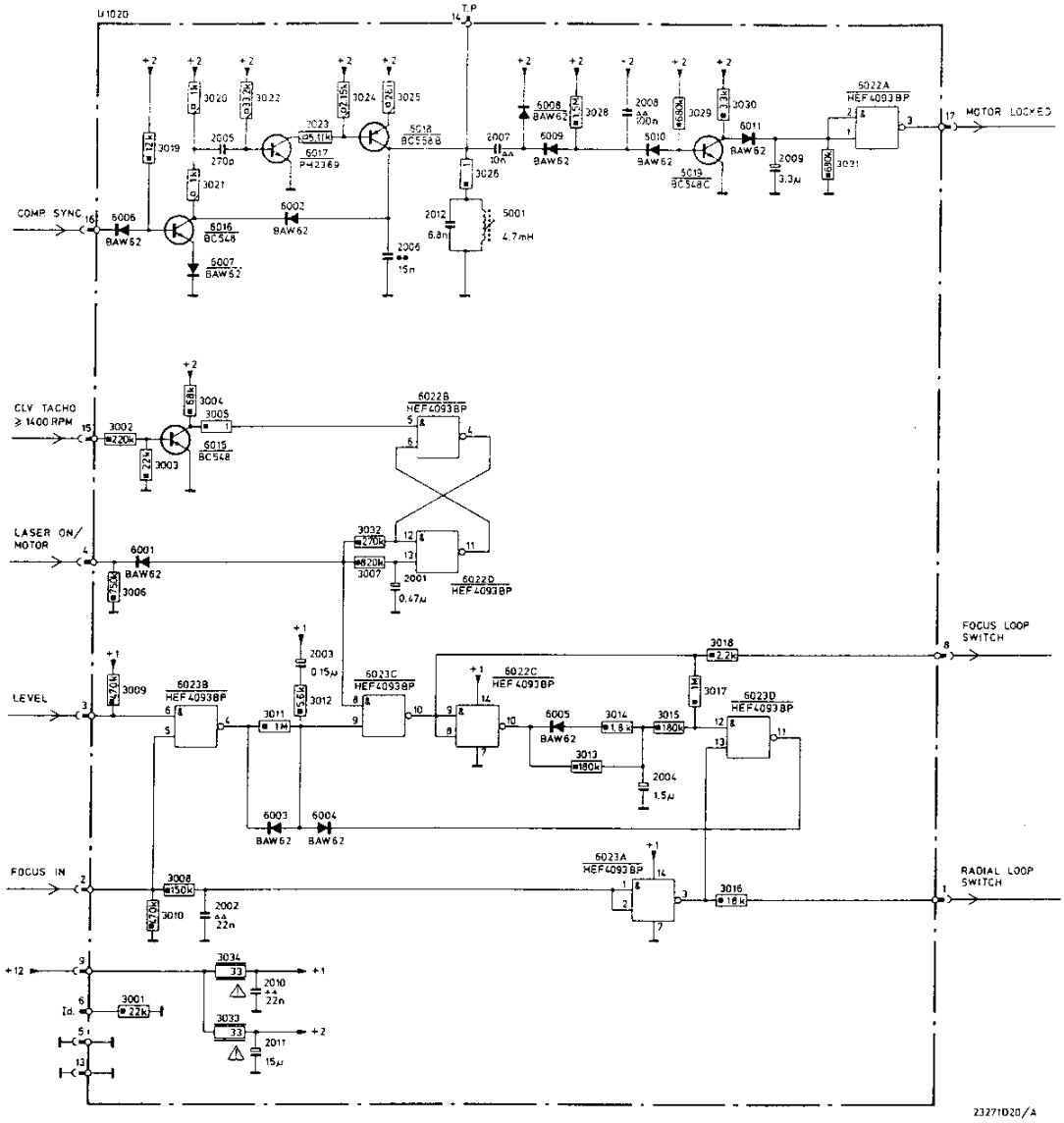

HEF4093BP		5322 209 14186
BC548		4822 130 40938
BC548C		4822 130 44196
BC558B		4822 130 44197
PH2369		4822 130 41594
BAW62		4822 130 30613
5001	4.7 mH	4822 156 20917

3033,3034	33 Ω NFR25	4822 111 30522
2001	0.47 μF - 40 V	4822 124 10195
2003	0.15 μF - 40 V	5322 124 14061
2004	1.5 μF - 63 V	4822 124 20723
2009	3.3 μF - 16 V	4822 124 20947
2011	15 μF - 16 V	4822 124 20977
2005	270 pF - 630 V	5322 121 54047
2012	6.8 nF	4822 121 50538

2...	3...	3...	5...	6...
2012				6005
	3017 3014		5001	6023 6022
	3013			6004
2009	3008			
		3031		
		3005		6011 6010
	3012	3026		6003 6019
2002	3011	3029 3030		
2008				
2003		3028		6008
2007	3015 3032			6009
	3016	3022 3004		6015
2004 2001	3021	3020		
2006				
	3007 3010	3023 3025		
2005 2011	3024	3003		6001 6016 6018
	3006 3034			6017
2010				6002
	3009 3001			6007
	3018 3033	3019 3002		6006

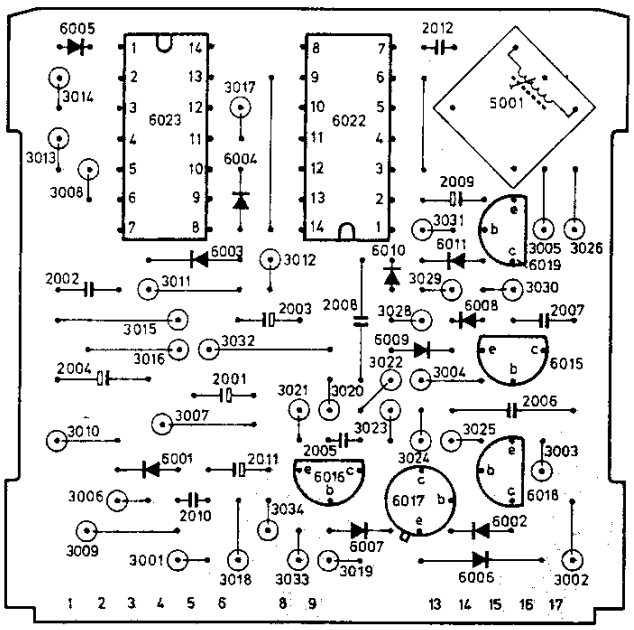

2...	3...	3...	5...	6...
2012				6005
		3017 3014	5001	6023 6022
		3013		6004
2009		3008		
	3031			
	3005 3026	3012		6011 6010 6003
2002	3029 3030	3011		6019
2008				
2003	3028			6008
2007		3015 3032		6009
	3022	3016		6015
2004 2001	3004 3020	3021		
2006				
	3023	3007 3010		
2005 2011	3025 3003	3024		6001
				6016
		3006 3034		6018 6017
2010				6002
		3009 3001		6007
	3002 3019	3018 3033		6006

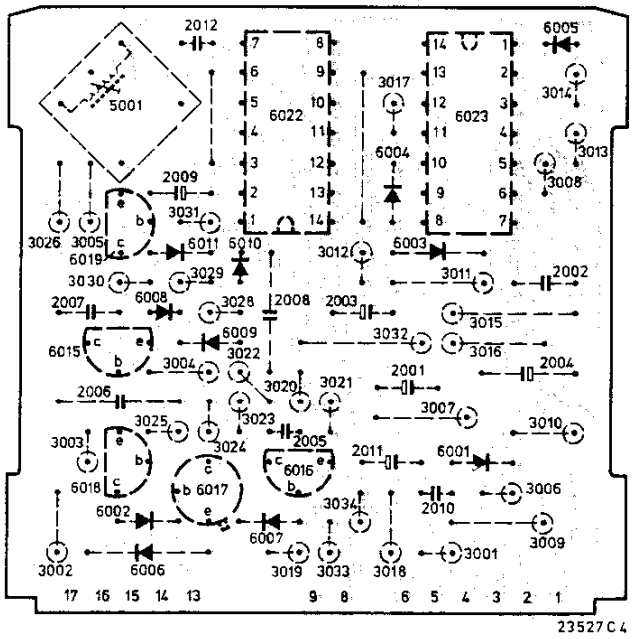

23527C4

FOR SERVICE MANUALS
CONTACT:
MAURITRON TECHNICAL SERVICES
www.mauritron.co.uk
TEL: 01844 - 351694
FAX: 01844 - 352554

CS 78 548

Video Disc Player 22VP600 - 22VP700

00/15/50/65

Service
Service
Service

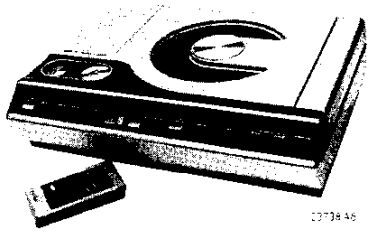

Safety regulations require that the set be restored to its original condition and that parts which are identical with those specified be used.

PART II

Repair Method

This repair method enables quick location of faults within the machine.

The VLP should be tested in the sequence given in this repair method.

Upon repairing it is advisable to make use of a special service repair stand for VLP sets.

Explanation of the symbols and instructions used in this repair method

V ⎓ 2U1016	Measure the voltage on point 2 of U1016.
Osc. 2U1016	Check the oscillogram on point 2 of U1016.
11U1012 → TS7310	Check the circuit or the connection between the indicated points.
U1019	Check or replace U1019.
U1008 (TS6017)	Check transistor 6017 in U1008.

Copyright Video Service - VLP N.V. Philips' Gloeilampenfabrieken Eindhoven

PHILIPS

GB

Subject to modification
4822 726 13213
Printed in The Netherlands

PHILIPS

CS 79 291

REPAIR METHOD VLP

. Use a normal CAV video disc.
. Inspect the video disc for dirt and damage.
. Clean the objective.

FOR SERVICE MANUALS
CONTACT:
MAURITRON TECHNICAL SERVICES
www.mauritron.co.uk
TEL: 01844 - 351694
FAX: 01844 - 352554

START OF CONTROL PROCEDURE

. Connect VLP to CTV.
. Switch "ON" CTV.
. Select VLP channel (37).
. Open lid of VLP.
. Remove the video-disc.
. Switch "ON" VLP with OFF/ON button (lid remains open).

"ON" indication led lights up?	NO	VL1101, VL1102, if ruptured check also TS7212 Power led → +20		
YES				
Noise still on screen?	YES	Check tuning on CTV. Noise still on screen?	YES	See point 2, page 4
NO		NO		
Does objective raise?	YES	V⎓ 9U1016 = 12 V?	NO	+12 V circuit
NO		YES		
		V⎓ 15U1016 = 10 V?	NO	U1020
			YES	U1016
Has the slide returned to the start position?	NO	V⎓ 3U1018 = 12 V?	NO	U1021
YES		YES		
		V⎓ 7U1018 = −12 V?	NO	7U1018 → −12 −12 V circuit (TS7116, TS7112)
			YES	U1018, slide motor Slide stop switch
. Lay in video-disc and close lid of VLP.				
Does disc-motor start rotating?	NO	. Connect bTS7310 (MP4) to chassis for some seconds.		
YES		. Does disc-motor start rotating?	YES	TS7411 ... TS7414
			NO	TS7310 ... TS7313, TS7415, lid switches, disc motor
Picture correct?	YES	Sound correct?	NO	See point 9, page 10
NO			YES	See point 3, page 5

See next page.

Does disc-motor keep switching OFF and ON? (very audible)	NO	See point 4, page 6		
YES				
Does laser glow?	NO	Osc. cTS7115 (on supply panel)	not correct	TS7114, TS7115
YES			correct	TS7209 ... TS7212, laser, multipl. 1105
. Press button "search forward". Slide moves fast forward?	NO	U1012, U1021		
YES				
. Open lid of VLP $V_{\overline{\cdots}}$ 1U1016 = 2.5 V?	NO	1U1016 → U1000, U1000 → +12, U1000 → photo diodes, U1000		
YES				
. Check if $V_{\overline{\cdots}}$ 1U1016 remains 2.5 V immediately after closing lid	NO	U1000 → photo diodes, U1000, photo diodes		
YES				
. Does $V_{\overline{\cdots}}$ 1U1016 remain 2.5 V after disc-motor has reached maximum speed?	NO	See point 1, page 4		
YES				
$V_{\overline{\cdots}}$ 8U1020 = 10 V?	YES	Replace U1020 If no result U1016, TS7416 and TS7417 on supply panel		
NO				

. Replace U1016
. If no result:
. Open lid of VLP.
. Remove video disc.
. Close lid of VLP.

Does objective jump about 2 times per second[(very audible)	YES	Replace U1017 If no result:
NO		
. Check objective coil (12 Ω)		Check radial mirror coil (20 Ω)
if correct		if correct

U1000 → photo diodes, U1000

1. DISC MOTOR SWITCHES OFF AND ON

. Osc. 3U1012	correct	Replace U1020 If no result: U1012, TS7309, 11U1012 → TS7310, TS7317
not correct		
Osc. 2U1001 > 150 mV?		Check the adjustment of R3408 on supply panel
YES		
NO		
Osc. 8U1001	correct	U1001
	not correct	U1000. Plug A25
. Press button "search forward" for a short while.		
Osc. 3U1004	not correct	U1003, DL5002
correct		
Osc. 10U1004	correct	U1012
	not correct	U1004

2. PICTURE NOISE NOT SUPPRESSED*

VLP switched "on", lid remains open.
. V⎓ Plug C031 = 12 V? (on supply panel)

NO

YES

V⎓ 4U1008 = 11 V? NO 11U1021 → +12.
U1021 (TS6029)

YES

. Lay in disc.
. Close lid of VLP.

Picture correct? NO V⎓ F-U1023 = 12 V? YES U1023, U1022

NO R3001/C2001, on signal panel

YES

U1008 (TS6016)

. Remove plug C03.
. Switch "OFF" VLP.
. Wait for about 15 sec.*
. Switch "ON" VLP again.

. V⎓ Plug C031 (on p.c. board) = 12 V? NO Connect plug C03 again, R3122.
Check +12 V and −12 V circuits on supply panel.

YES

Check the +12 V and −12 V circuits on the signal panel for short circuit by removing the units one by one, begin with U1016, U1017, U1018 and U1019*.

* *Remark:* After a short-circuit of the +12 V or −12 V it is necessary to switch "off" the VLP for about 10 seconds to reset the supply circuits again.

FOR SERVICE MANUALS
CONTACT:
MAURITRON TECHNICAL SERVICES
www.mauritron.co.uk
TEL: 01844 - 351694
FAX: 01844 - 352554

3. NORMAL PLAY CORRECT

. Press button "play reverse".
. Picture correct?

YES

NO

. No or weak picture?	YES	Osc. 3U1005	correct	U1003
NO			not correct	U1005
. Does picture move in reverse direction?	NO	U1017, U1021		
YES				
. Check colours	Colours unstable		Replace U1007	
No colours			If no result:	
. Replace U1006			Osc. 15U1005	not correct U1021
If no result:				correct U1012, U1005 (TS6009, TS6010)
Osc. 3U1006	correct	U1017		
not correct				
Osc. 17U1006	correct	U1021		
	not correct	U1005		
. Check "slow motion"	not correct	U1021 (TS6021, TS6022, TS6031)		
correct				
. Check "index"				
not correct				
U1008, U1021				

4. DISC MOTOR KEEPS ROTATING

. No or weak picture or no synchronisation?					
YES					
NO					
. Slide runs too fast?	YES	Open lid of VLP. $V_{\cdots}$ 1U1017 = −12 V?		YES	U1017
NO				NO	TS7117, TS7112
. Picture horizontally unstable and no colour?	YES	See point 5, page 8			
NO					
. Many drop-outs in picture?	YES	See point 10, page 10			
NO					
. Black horizontal stripes in colours?	YES	U1011 (TS6005)			
NO					
. Colours correct?	NO	Osc. 8U1007	not correct	U1012	
YES			correct	U1007, U1006 (TS6013)	
. Picture height too small?	YES	U1008 (TS6017)			
NO					
. Some parts of the disc are sometimes unstable and repeated?	YES	U1016			
. Disc motor rotates too fast (very audible)?	YES	See point 7, page 9			
NO					
. Sound correct?	YES	See point 8, page 9			
NO					

See next page

FOR SERVICE MANUALS
CONTACT:
MAURITRON TECHNICAL SERVICES
www.mauritron.co.uk
TEL: 01844 - 351694
FAX: 01844 - 352554

* *Remark:* If the picture is bad at the beginning of the disc only, replace U1011, if at the end of the disc only, replace U1019 (TS6014).

. Press button "search forward".
Does slide move fast forward?

NO

YES

. Release button and check at the same time if slide stops moving fast (forward or backward).

Slide keeps moving too fast. (easily seen)

YES — Connect 14U1018 to chassis. Does slide stop?

NO — U1018

YES

Remove connection
V ⎓ 1U1017 > 0.5 V?

NO — U1017, Radial mirror coil (20 Ω) Plug A05

YES

U1000 → radial photo diodes, U1000

NO

Picture and sound correct?

NO — See point 6, page 8

YES

. Press button "index".
Index correct?

NO — U1012 (R3026)

YES

. Press button "play reverse".
Picture correct?

NO — U1017, U1021 (R3059)

YES

V ⎓ 11U1011 < 5 V?

NO — U1011

YES

Check mechanical slide stop, see mechanical adjustments.

. Picture present?

YES

NO

V ⎓ 15U1021 = 11 V?

NO — TS7418

YES

V ⎓ 16U1021 = 6 V?

NO — U1018, U1021

YES — U1018, Slide motor

. Open lid of VLP.
V ⎓ 3U1018 = 12 V?

NO — U1021

YES — U1018, U1018 → slide motor, slide motor

5. PICTURE HORIZONTALLY UNSTABLE

. Replace U1019

If no result:

Osc. 1U1013	not correct	Osc. 3U1013	not correct	U1011
correct			correct	U1013

Osc. 1U1012	not correct	U1012
correct		
V⎓ 17U1019 = –6 V?	YES	U1012
NO		

. Check tangential mirror coil (20 Ω) between points 1 and 13 of U1019.

correct

. Replace U1014.

If no result:

U1012 (TS6006, TS6007)

U1013 (TS6007, TS6008)

TS7309 on supply panel

FOR SERVICE MANUALS
CONTACT:
MAURITRON TECHNICAL SERVICES
www.mauritron.co.uk
TEL: 01844 - 351694
FAX: 01844 - 352554

6. PICTURE AND SOUND NOT CORRECT

V⎓ 11U1011 < 5 V?	NO	U1011, U1012		
YES				
V⎓ 3U1012 = 1.1 V?	NO	V⎓ cTS7315 = ca. –10 V? (MP3 on supply panel)	YES	U1012, U1016
			NO	See point 7, page 9
YES				
V⎓ bTS7310 = 4 V? (MP4 on supply panel)	NO	TS7414		
YES				
V⎓ 8U1020 = 0 V?	NO	U1020, 3U1020 → U1000		
YES				
V⎓ 12U1017 = 0 V?	NO	U1017, U1015		
	YES	U1017, U1012		

7. DISC MOTOR RUNS TOO FAST OR TOO SLOW

. Osc. 7-IC7408
Wave form correct?

NO — . Open lid of VLP.
V⎓ cTS7112 = −12 V?

NO — −12 V circuit (TS7116, TS7112)

YES — YES — IC7408 and connector.
3-IC7408 → tacho gen.

. Connect b-TS7413 to chassis
for a short time.

Does motor stop?

YES — TS7410, TS7411, TS7412
TS7414, disc-motor

NO — TS7310, TS7311, TS7313, TS7315

8. NO OR WEAK PICTURE OR NO SYNC., SOUND CORRECT

. Press button "slow motion forward".

Picture correct?

YES — 8U1004 → 4U1005 → 10U1003

NO

. Connect 4U1008 to chassis (demute).

Picture correct?

YES — U1021 (R3076, TS6029)

NO

. Remove connection.
. Press button "normal play".

Osc. 8U1004 correct?

NO — Osc. 17U1003 correct?

NO — U1001

YES — YES — U1003,
3U1003 → 8U1004

Osc. 15U1008 correct?

YES — U1023

NO

Osc. 14U1008 correct?

YES — U1008

NO — U1012

FOR SERVICE MANUALS
CONTACT:
MAURITRON TECHNICAL SERVICES
www.mauritron.co.uk
TEL: 01844 - 351694
FAX: 01844 - 352554

9. PICTURE CORRECT, SOUND NOT CORRECT

Audio channel 1 correct?	YES	V⎓ 15U1010 < 1 V?	YES	U1010
NO			NO	U1021
Audio channel 2 correct?	YES	V⎓ 15U1009 < 1 V?	YES	U1009
NO			NO	U1021
V⎓ 17U1002 = 8 V?	NO	U1002		
YES				
V⎓ cTS6001 = 4.5 V? (on signal panel)	NO	TS6001		
YES				
Inject on 4U1010. Hum audible?	NO	U1023		
	YES	U1001		

10. A LOT OF DROP OUTS IN PICTURE

Osc. 3U1002 correct?	NO	U1003 (TS6005)		
YES				
Osc. 11U1004 correct?	YES	Osc. 15U1004 correct?	NO	U1002
NO			YES	U1004
Osc. 17U1004 correct?	NO	U1001 (TS6012), DL5001		
	YES	U1004		

Video Disc Player 22VP600 - 22VP700

00/15/50/65

Service
Service
Service

LaserVision

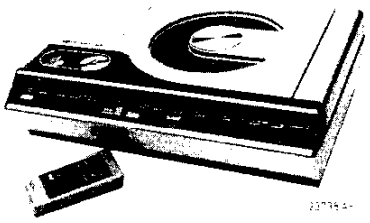

PART III

Circuit Description

CONTENTS

The "Laser Vision" System
Encoding of the signals on the disc
Lead-in tracks
Lead-out tracks
Programme area
C.A.V. discs
C.L.V. discs
Focusing
Radial tracking
Time error compensation
The light path
Path of video and audio signals in normal play forward
Video signal path during special playing modes

Colour separator	U1011
Reference control	U1012
Sample detector	U1013
Tangential phase detector	U1014
Search adapter	U1015
Focus drive	U1016
Radial drive	U1017
Slide drive	U1018
Tangential drive	U1019
Sequence logic	U1020
Mode control module	U1021

Power supply
Turntable motor control
Remote control

FOR SERVICE MANUALS
CONTACT:
MAURITRON TECHNICAL SERVICES
www.mauritron.co.uk
TEL: 01844 - 351694
FAX: 01844 - 352554

Copyright Video Service - VLP N.V. Philips' Gloeilampenfabrieken Eindhoven

Description des circuits Schaltungsbeschreibung Kredsløsbeskrivelse Kretsbeskrivelse Kretsbeskrivning Toimintaselostus Descrizione del circuito Description del circuito

PHILIPS

Subject to modification

GB 4822 726 13214

Printed in The Netherlands

PHILIPS

CS 75 822

The Laser Vision System

In the Laser Vision system the video and audio information are stored on a disc in encoded form.
The information on the disc is scanned optically on a Laser Vision player and then converted into an RF TV signal suitable for a standard colour television receiver.
The information is stored on the disc along a spiral track in the form of pits; the disc is scanned from the centre to the outside. The length of the pits and their spacing are determined by the stored information.
The pits are 0.4 μm wide and approximately 0.1 μm deep. The track-to-track spacing is 1.6 to 1.8 μm (refer to Fig. 1). The overall length of the track on a 30 cm disc is about 34 kilometres!

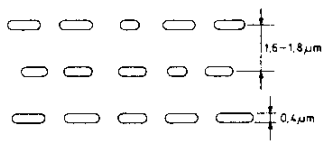

Fig. 1

The disc is made of a transparent plastic into which the pits are pressed. An extremely thin reflective layer of aluminium is added on top, followed by a protective coating that covers the whole. Two of these discs are glued together to form a double-sided disc. A cross section of the disc is shown in Fig. 2.

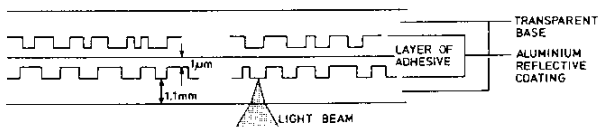

Fig. 2

A great advantage of the optical system is the contactless read-out of the information on the disc, as a result of which wear of disc and read-out device is non-existant.
A second advantage is the effective protection of the information on the disc against dust, fingerprints, etc.
When taking a closer look at the beam path from the objective to the disc (refer to Fig. 3), we notice that at the place where the light cone enters the transparent base section the light cone's diameter is still fairly large.
Dust particles, etc. at this place exert very little influence; the light passes, as it were, around the dust particle. This highly effective protection of the information enables normal handling of the disc.

27627A19

Fig. 3

Optical read-out of the information on the disc takes place as follows:
The light beam from a HeNe laser is focused on the disc by a lens (objective). In the absence of a pit practically the full amount of light is reflected. The reflected light passes through the objective and is then separated from the light beam going to the disc. The reflected light now falls on a photodiode; the amount of current that starts flowing through the diode is proportional to the amount of light falling on it.
When the light beam hits a pit, practically no light will be reflected due to the properties of the laser light and the depth of the pit; consequently, the current passing through the photodiode will be reduced.
In this way it is possible to convert the information on the disc into an electrical signal that is suitable for further processing to a normal TV signal in the player.

Encoding of the signals on the disc

The video signal is frequency modulated on a carrier (refer to Fig. 4a). Top sync level is situated at a frequency of 6.76 MHz, black level at a frequency of 7.1 MHz and white level at a frequency of 7.9 MHz. This results in a total frequency swing of 7.9 - 6.76 = 1.14 MHz.
Including the side bands the video FM signal encompasses a frequency range up to approximately 2.5 MHz at the lower side.
The two audio signals are equally frequency modulated on carriers of 683 kHz and 1066 kHz respectively. The frequency swing of the two channels is ± 100 kHz (refer to Fig. 4b).

Summing these three signals and next limiting them results in a pulse-width modulated signal (refer to Fig. 4c). The negative half periods of this signal determine the length of the pits, the positive half periods determine the spacing of the pits (refer to Fig. 4d).
Fig. 5 shows the entire frequency spectrum with associated recording levels of the video and audio RF signals.

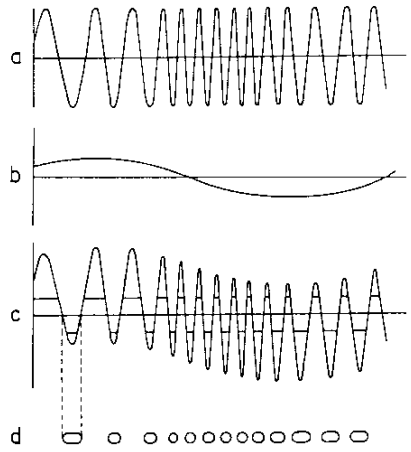

27624A19

Fig. 4

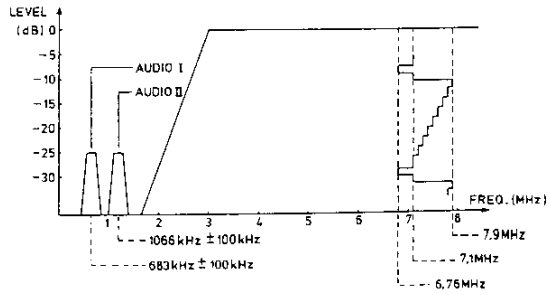

Fig. 5

27625A19A

The encoded RF signals may be stored on the disc in two different ways:

1. The disc rotates at a constant speed (1500 rpm = 25 rps). At each revolution of the disc a complete TV picture is reproduced. This implies that the length of the track corresponding to one picture gradually increases from the centre of the disc to the outside. The frame sync pulses are situated on a diagonal. This type of disc is referred to as CAV disc (Constant Angular Velocity disc). Special playing modes like 'still picture', 'slow motion', 'fast forward' and 'reverse' are feasible with this type of disc only, since the frame sync pulses and, consequently, the frame blanking are situated on a diagonal. This allows jumping from one track to the next one or to the preceding one.
   The maximum playing time of a CAV disc is 36 minutes/side.
2. The track length of each frame on the disc is constant.
   This implies that the rotational speed of the disc decreases when scanning the disc from the inside to the outside, and that from 1500 rpm at the inside to 565 rpm at the outside of the disc. This type of disc is referred to as CLV disc (Constant Linear Velocity disc). No special playing modes can be realised with this type of disc, because the frame sync pulses and frame blanking are no longer situated on a diagonal, thus putting jumping from one track to the other out of the question.
   The maximum playing time of a CLV disc is 54 minutes per side. The player is suited for both types of discs.
   In addition to the video and audio information, the disc contains a number of special codes, inserted in the frame blanking periods.
   Test signals have been inserted during the lines 19, 20, 332, 333. Digital codes for various purposes have been inserted during the lines 16, 17, 18, 329, 330, 331.

   These signals have the following functions:

Lead-in tracks

A minimum of 900 tracks prior to the start of the actual programme contain a start code which sends the read-out objective to the beginning of the programme at nine times the normal speed.

Lead-out tracks

A minimum of 600 tracks immediately after the end of the programme contain an end code which sends the read-out objective back to the beginning at 75 times normal speed. Video and audio signals are muted during the return period.

Programme area

Here a distinction has to be made between CAV and CLV types of discs.

CAV discs

1. Picture code consisting of a picture number by means of which each individual picture of a programme can be identified.
   The number may be displayed on the TV screen, if desired.
   The picture number code is always present in the first field of each complete television frame. The second field may contain a stop code to switch the player to STILL PICTURE mode.
2. Chapter code consisting of a chapter number by means of which a search action can be automatically stopped as soon as the start of the relevant chapter is reached.
   The chapter number may also be displayed on the TV screen, if desired.
   The presence of stop code and chapter code is optional and depends on the programme content.

CLV discs

1. A normal play code is always present in CLV discs. This code disables the special modes of operation of the player.
2. Instead of a picture number code a time code is present in CLV discs. It contains a time coding with hour and minutes indication showing the time elapsed since the start of the programme. This time may be displayed on the TV screen, if desired.

Focusing

The objective used to read the information on the disc has a very small depth of focus, that is, maximum 2 μm. In view of tolerances in disc and in player construction this accuracy can only be realised by means of a servo-control system that continuously verifies and corrects the focusing of the objective.
For this purpose the objective is mounted in a magnet so as to allow vertical motion. Around the objective and firmly attached to it, a coil has been mounted. By feeding a current through the coil, the objective will move more or less upwards, depending on the current intensity. Fig. 6 shows a cross-sectional view of the objective plus coil and magnet.
The system is very much similar to a loudspeaker system.

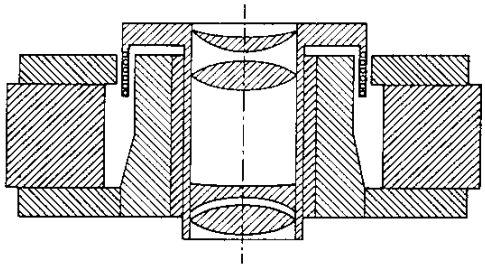

Fig. 6 27623A19

The objective is driven in the following way:
The light reflected by the disc is focused on the photodiodes by the objective. On its way to the diodes the reflected beam passes a cylindrical lens. In conjunction with the objective, this lens constitutes an astigmatic lens.
Unlike a spherical lens, an astigmatic lens does not have one single focal point, but two focal lines at some distance from each other and at right angles to each other. Between the focal lines a plane exists where a circular picture is formed. When the disc is out of focus with respect to the objective, that is, too far from or too close to the objective, the cylinder lens will modify the shape of the picture from the focused state (circular picture) to an elliptical picture. The direction of the ellipsis' axes is determined by the fact whether the disc is too far from or too close to the objective. The photodiode that converts the light variations into an RF signal is composed of four quadrants A, B, C and D (refer to Fig. 7). When the objective is in focus, all four quadrants receive equal amounts of light.
When the objective is out of focus, either A and B or C and D receive more light. The quadrants are interconnected crosswise. The sum of the signals over A, B, C and D constitutes the RF signal. The difference signal (A+B) - (C+D) is the drive signal for the objective.

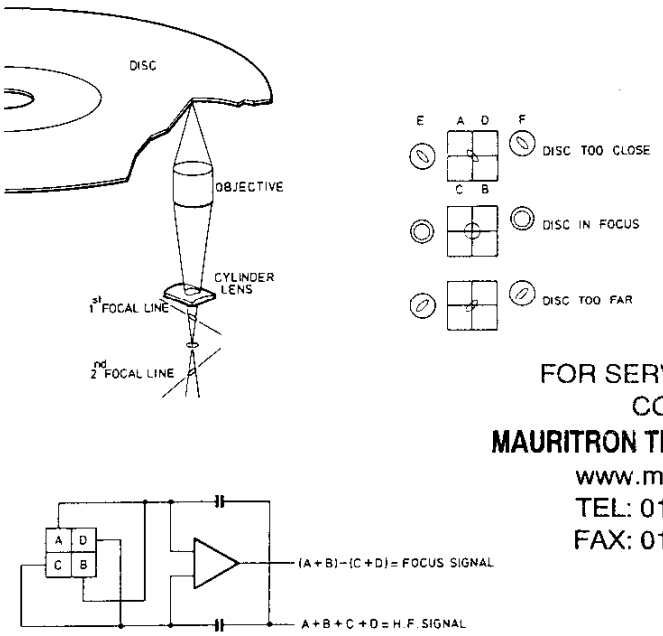

FOR SERVICE MANUALS
CONTACT:
MAURITRON TECHNICAL SERVICES
www.mauritron.co.uk
TEL: 01844 - 351694
FAX: 01844 - 352554

Fig. 7

27620C19A

Radial tracking

The information on the disc is contained in a spiral track that is read from the inside to the outside. This implies that the objective - in order to be capable of following the track - has also to move from the centre of the disc to the outside.
For this purpose the objective and all associated components which constitute the optical system are mounted on a slide, driven by a motor and moving radially under the disc.
The light spot has to follow the track on the disc with an accuracy of approximately 0.1 μm.
Tolerances in player and disc may cause a track wobble of 100 μm. It will be clear that the slide is incapable of following this wobble at a rotational speed of 25 rps.
To obtain the required accuracy a movable mirror has been inserted in the light path under the objective; this mirror allows to move the light spot radially over the disc.
A magnet is attached to the mirror. Around the mirror a coil is mounted. When a current flows through the coil, the intensity and the direction of this current determine to what extent the mirror will pivot to the left or to the right (refer to Fig. 8).

Driving of the mirror is obtained as follows:
In the optical system, apart from the main beam for track scanning, two further auxiliary light beams are formed whose impact is slightly displaced with respect to the track's centre line, in opposite directions.
The light spots formed on the disc by the two auxiliary light beams fall partly on the track and partly outside the left or right edge of the track. The objective focuses these light spots on two separate photodiodes situated at either side of the signal diodes (E and F in Fig. 7). When the track is followed correctly, the signals coming from each diode will be equal. When tracking is less optimal, it depends on the direction of deviation which diode output will exceed that of the other diode. (Refer to Fig. 9).
The difference between both signals is - after amplification - used to drive the mirror. When the average voltage across the mirror coil is positive or negative, the slide motor will be controlled until the average voltage is again 0 (zero).

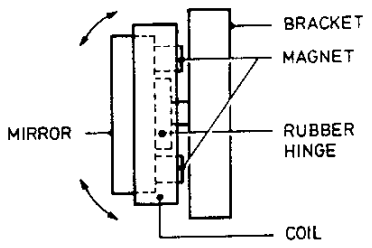

27628A19A

Fig. 8

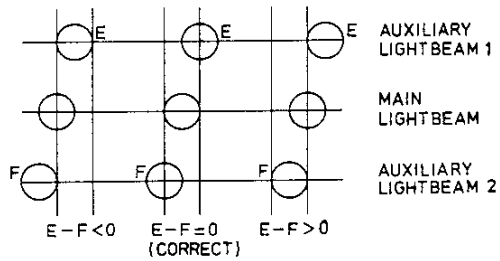

27625A19A

Fig. 9

Time error compensation

A television picture consists, as we know, of lines that have to be written in an exactly defined time interval (64 μsecs for the PAL system).
Deviations result in a distorted picture and moreover in phase errors in the colour signal which might cause loss of colour. The player's signal should also meet this requirement as to constancy of the time base to be capable of reproducing an undisturbed picture with colour information.
As stated before, tolerances in disc and player construction may cause eccentricities up to 100 μm. Eccentricity causes speed variations of the track with respect to the scanning beam at the frequency of the rotational speed (25 Hz). These variations give rise to timebase errors that may easily attain approx. 11.5 μsecs.
The maximum permissible deviation of the timebase that still ensures a stable picture on any TV receiver is 10 nsecs.
In order not to exceed this value a first requisite is to keep the motor speed as constant as possible. To ensure this, the phase of the line sync pulses in the video signal is compared with the phase of pulses having the line frequency coming from a crystal oscillator. The control voltage obtained from this comparison is used to control the turntable motor speed.
It will, however, be obvious that this control system is not capable of correcting speed variations having a frequency of 25 Hz or more.
For the correction of these errors use is made of a second movable mirror that allows tangential movement of the light beam across the disc surface. In this way the scanning speed can be increased or decreased.
The tangential mirror is driven by a signal obtained by comparing the phase of a crystal-controlled signal having the line frequency and line-frequency pulses of the video signal.
Since the line sync pulses are not suitable to perform a sufficiently accurate measurement of the time difference, use is made of a signal having a frequency of
3.75 MHz (240 times line frequency) and recorded on the disc at the level of the top sync pulses.
By using during each line sync pulse the same zero crossing of the 3.75 MHz signal, the real line duration can be measured with sufficient accuracy. With this timebase correction facility it is possible to connect the player to any type of TV receiver.

The light path (refer to Fig. 10)

The first component in the light path is the light source. It consists of a 1 mW Helium-Neon laser. The light produced is monochromatic and has a wavelength of 632.8 nm; furthermore, it is coherent and linearly polarized (vertically).
The next component in the light is the grating. Through this grating the original light beam is divided into three light beams of which the intensities are in the ratio of 1 : 3 : 1.
Further light beams are created, but their intensity is so low that they can be ignored.
Next the light passes through the spot lens. The spot lens focuses the three light beams just above the photodiodes.
The light beams now encounter the first fixed angle mirror that deflects the light through 90°. Next the light hits the second fixed angle mirror where it is again deflected through 90°. The fixed angle mirrors merely serve the purpose to allow accommodation of the entire optical system on a slide of practical size.
The light beams next pass through the Wollaston prism. This prism is made of quartz and has the property of deflecting light in different directions determined by the direction of polarization of the light.
Subsequently, the light passes through the ¼ λ plate that causes the polarization of the light to change from linear to circular. The ¼ λ plate is also made of quartz.
The light then hits the radial mirror that is movable around a vertical axis and next the tangential mirror that is movable around a horizontal axis.
The light beams now pass through the objective; the three light beams thus become three light spots on the disc.
The central spot for track scanning and the remaining light spots for radial tracking.
After reflection from the disc, the light (modulated now) follows the same path in opposite direction.
In the ¼ λ plate the light is converted from circularly polarized light into linearly polarized light.
After the ¼ λ plate the polarization is horizontal, caused by the reflection at the disc.
In the Wollaston prism the horizontally polarized light is deflected. In this way separation between the inward and the reflected light beams is obtained.
Via the fixed angle mirrors the light hits the cylinder lens. The purpose of the cylinder lens has been explained in the chapter: Focusing.
The three light beams finally fall on the photodiodes which convert the modulated light into an RF signal (the actual information), a signal for focusing and a signal for radial tracking.

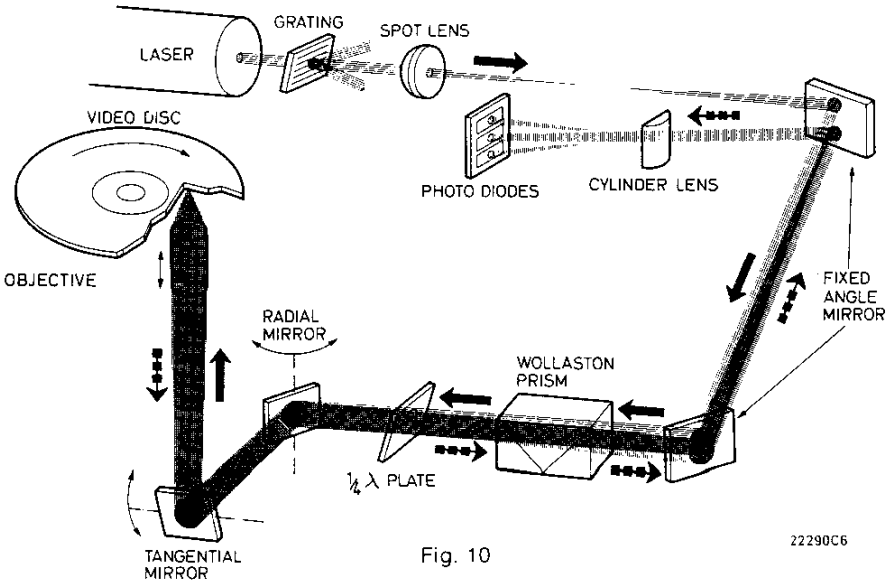

Fig. 10

Path of video and audio signals in normal play/forward mode

The sum signal of the four photodiodes is amplified in U1000 (= pre-amplifier) and fed via an emitter-follower to pin A252 on U1000.
From here the signal flows via a correction filter to the input, pin 8, on the RF processor U1001.
In the RF processor the signal is presented via a controlled amplifier to a low-pass and a high-pass filter. The cut-off frequency of the low-pass filter is 1.2 MHz. The signal found at the exit of this filter is the RF audio signal. This signal is amplified and then fed via an emitter-follower to pin 15 on unit 1001.
Part of the RF audio signal is used in U1001 to generate the AGC voltage for the first amplifier stage.
The high-pass filter has a lower transmission frequency of 1.5 MHz. The signal found after this filter is the RF video signal.
The RF video signal is amplified and the highest frequencies are boosted by a tuned circuit included in the collector circuit of the transistor used. Since the amplitude of the highest frequencies increases when playing a CAV disc, parallel to this circuit a FET is connected which acts as an adjustable resistance to control the circuit quality and, as a result of this, the resonant rise.
The gate of this FET is controlled by the MTF signal derived from the burst amplitude in U1011.
Via an amplifier stage the RF video signal flows to pin 2 on unit 1001. Via a second amplifier the RF video signal is fed to pin 4 on unit 1001.
The RF video signal appearing at pin 2 of U1001 flows to the input (pin 17) on U1003. U1003 constitutes the video demodulator 1. In this unit the RF video signal is demodulated and the video signal is fed via a 5.5 MHz low-pass filter and two amplifier stages to pin 3 on U1003. From here the signal is passed on via a 465 nsec delay line to pin 3 on U1004.
Via a switch and an emitter-follower the video signal reaches pin 8 on U1004.
From this pin the video signal is fed via a second delay line of 465 nsecs to pin 8 on U1005. In U1005 the video signal is amplified and then fed via pin 4 on U1005 to pin 12 on U1003.
Via a switch in U1003 the signal eventually appears at pin 10 on U1003.
The RF video signal present at pin 4 on U1001 is passed on via a 64-μsec delay line (1 line time) to input pin 17 on U1004 (= video demodulator 2).
The RF video signal delayed by 1 line time is demodulated here. The bandwidth of the video signal is limited to 2.5 MHz in a low-pass filter; this implies that the video signal does not contain colour information.
Via an amplifier the signal reaches the other input of the switch in U1004 so that, dependent on the position of this switch, the direct video signal or the one delayed by 1 line time is present on pin 8 of U1004.
The switch is controlled by a pulse generated in the drop-out detector U1002.
In this unit the magnitude of the RF audio signal is measured, as well as the magnitude of a combination of the RF video, the video signal and the DC level of the video signal. If the signal drops - as a result of an interference (e.g. damage to the disc) - below a given value, a pulse-shaped signal is fed to both audio demodulators and to the video demodulator, so that, during the time that the interference is present, the signal of the preceding line is reproduced, of course with a maximum of 1 line! In this way interference in the picture is eliminated.

From pin 10 on U1003 the video signal flows to pin 1 on U1008, the video processor.
In the video processor the sync signal is removed and a new sync signal is added. The next element is a switch that shorts the video signal until the disc has reached the speed required or during return to the beginning of the disc. Subsequently, the signal enters an adder circuit where the index signal is added. Via an emitter follower the signal arrives at pin 17 on U1008 and from here the video signal is fed to the video output of the player.
The video signal is also fed via a correction network to pin 15 on U1008 and from here to pin P on UHF modulator U1023.
In this unit the video signal is modulated on a UHF carrier. The frequency is adjustable between channel 32 and channel 42. On pin 12 of U1008 a DC voltage of +3.9 V is available for fixing the black level in the UHF modulator.
The RF audio signal on pin 15 of the RF processor is fed to the pins 3 on the audio demodulators 1 and 2, U1009 and U1010.
Inside the audio demodulator the RF audio signal passes a bandpass filter tuned to 683 kHz (in audio demodulator 1) or to 1066 kHz (in audio demodulator 2). In this way the two audio channels are separated from one another. The RF audio signals are then demodulated and the resulting AF signals are fed through a low-pass filter with a cutoff frequency of 50 kHz, thus eliminating unwanted higher frequencies.
Next the AF signals reach a switch. By means of these switches either the LH channel or RH channel or both channels may be switched off, if wanted. During trick operation, when starting the disc or when returning to the beginning the audio channels are automatically switched off. When by means of the control buttons one channel is switched off, the signal of the other channel is fed to the related output. Both channels will then produce the same signal.
In both demodulators a second switch has been accommodated.
Normally, this switch is closed by the high level on pin 17 (+8 V) of the units. In the event of a drop-out pin 17 becomes low and the switch is opened.
Downstreams the switch a capacitor is installed; this C is capable of following amplitude variations in the AF signal and will consequently be charged to the instantaneous value of the signal. If the drop-out switch is opened, the instantaneous value to which the capacitor is charged at that moment of time will be fed to the amplifier, thus filling-in the drop-out.
This circuit is required to restrict the occurrence of annoying interferences in the sound.
The AF signal flows via an amplifier to the pins 2 on both units 1009 and 1010 and from here to the two audio outputs 1 (L) and 2 (R).
Via a voltage divider the signals also arrive at the pins 4 on both units. From here the signals flow together to an amplifier and then to the UHF modulator U1023. In this unit the AF signal is frequency modulated on a 5.5 MHz carrier (6 MHz in U.K.) the resultant signal is modulated on the RF video carrier.
The total RF signal appears on pin Q of the UHF modulator and flows from here - via the aerial switch U1022 - to the RF output on the player.

Video signal path during special playing modes

For the special playing modes like still picture, slow motion, play reverse and fast motion, where it is necessary to jump one track back or forth, the PAL system causes problems for the following reasons:
In the first place the R-Y phase changes each line by 180°. Owing to the odd number of picture lines (625) the R-Y phase of any first picture line is shifted 180° relative to the first picture line of the preceding or following picture.
In the second place the subcarrier frequency in the PAL standard is 4433618.75 Hz. This implies per picture

$$\frac{4433618.75}{25} = 177344.75$$

periods of the subcarrier are available.
As a consequence, the phase of each successive track changes by 90°, which will become clear from the following lines (Fig. 11).

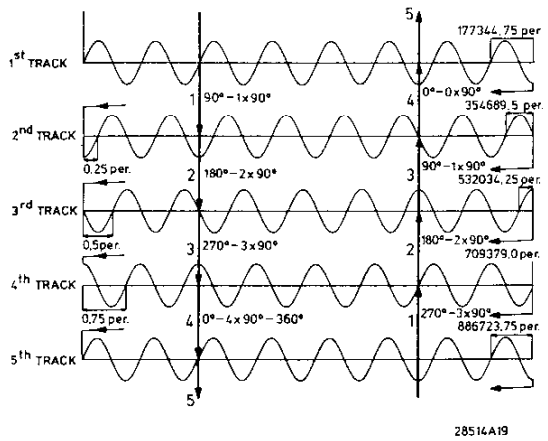

Fig. 11

Let us assume that for the first track the first positive-going zero crossing of the subcarrier coincides with the beginning of the track. At the end of track 1 177344.75 periods of the subcarrier will have passed.
The first positive-going zero crossing of track 2 will then occur 0.25 period after the beginning of track 2. At the end of track 2 354689.5 periods of the subcarrier will have passed. The first positive-going zero crossing of track 3 will occur 0.5 period after the beginning of track 3. At the end of track 3 532034.25 periods of the subcarrier have passed.
The first positive-going zero crossing of track 4 will thus occur 0.75 period after the beginning of track 4.
At the end of track 4 709379.0 periods have passed.
The first positive-going zero crossing of track 5 will again coincide with the beginning of the track.
Thus we have seen that there exists a difference of 0.25 period between two successive tracks. Since 1 period equals 360°, this implies that the phase shift between two successive tracks is 360 x 0.25 = 90°. This means also that the phase shift between track 1 and track 3 is 360 x 0.5 = 180° and between track 1 and track 4 360 x 0.75 = 270°.
At successive jumps in outward direction (that is, in the normal play forward direction) the phase of the subcarrier signal successively changes by 90°, 180°, 270°, 0°, 90°, etc.

With the help of Fig. 1 it will be evident that at successive jumps inwards the phase of the chroma signal successively changes by 270°, 180°, 90°, 0°, 270°, etc.
In the PAL system the R-Y phase of the corresponding lines of each frame changes 180°.
When the R-Y phase of track 1 starts positive, the R-Y phase of track 2 starts negative, of track 3 positive again, and so on.
Recording the phase errors of the subcarrier signal and of the R-Y signal at successive jumps in a table, we find:

	Forward subcarrier phase	R-Y phase	Reverse subcarrier phase
1st jump	90°	180°	270°
2nd jump	180°	0°	180°
3rd jump	270°	180°	90°
4th jump	360° = 0°	0°	0°

If we split the subcarrier phase error in an error of 0° or 90° and an error of 0° or 180°, the following situation will present:

	Forward subcarrier phase	R-Y phase	Reverse subcarrier phase
1st jump	0°+90° ↔	180° ↔	90°+180°
2nd jump	180°+ 0°	0°	0°+180°
3rd jump	180°+90° ↔	180° ↔	90°+ 0°
4th jump	0°+ 0°	0°	0°+ 0°

It appears that the R-Y phase always shows a 180° error when the subcarrier phase shows an error of 90°.
When the subcarrier phase correction could be split up in a correction of 0° or 180° and a correction of 0° or 90°, whereby in the case of a 90° correction the R-Y phase could at the same time be corrected 180°, we would obtain a correct chroma signal.
The 0° or 180° phase correction is realised by feeding the chroma signal to a controllable phase-shifter which, dependent on a control signal, realises a 0° or 180° phase shift. The control signal in question is the burst PAL signal. This signal is provided by the control module.
The 0° or 90° phase correction combined with the 180° correction of the R-Y phase takes place as follows:
The chroma signal may be represented by (B-Y) $\cos\omega t \pm$ (R-Y) $\sin\omega t$. It has been found that in case this signal is mixed with a signal having twice the subcarrier frequency (8.86 MHz) with a 90° phase shift, the mixer product assumes the following form:
(B-Y) $\cos(\omega t + 90°) \mp$ (R-Y) $\sin(\omega t + 90°)$ + (B-Y) $\cos(3\omega t + 90°) \pm$ (R-Y) $\sin(3\omega t + 90°)$.
When the unwanted component $3\omega t + 90°$ is filtered out, the following form remains:
(B-Y) $\cos(\omega t + 90°) \mp$ (R-Y) $\sin(\omega t + 90°)$.
Thus we see that after mixing and filtering out of the unwanted component a chroma signal is left with 90° phase-shift and inverted R-Y phase relative to the original signal.
By mixing or not mixing we obtain a signal with a 90° phase-shift + inverted R-Y phase or 0° and initial R-Y phase.
The control signal for the mixer circuit is the burst switch signal that is also supplied by the control module.

The chroma correction described above is performed by means of the units U1005, the luminance separator, U1006, the mixer switch and U1007, the subcarrier regenerator.
To follow the signal path refer to Fig. 12.

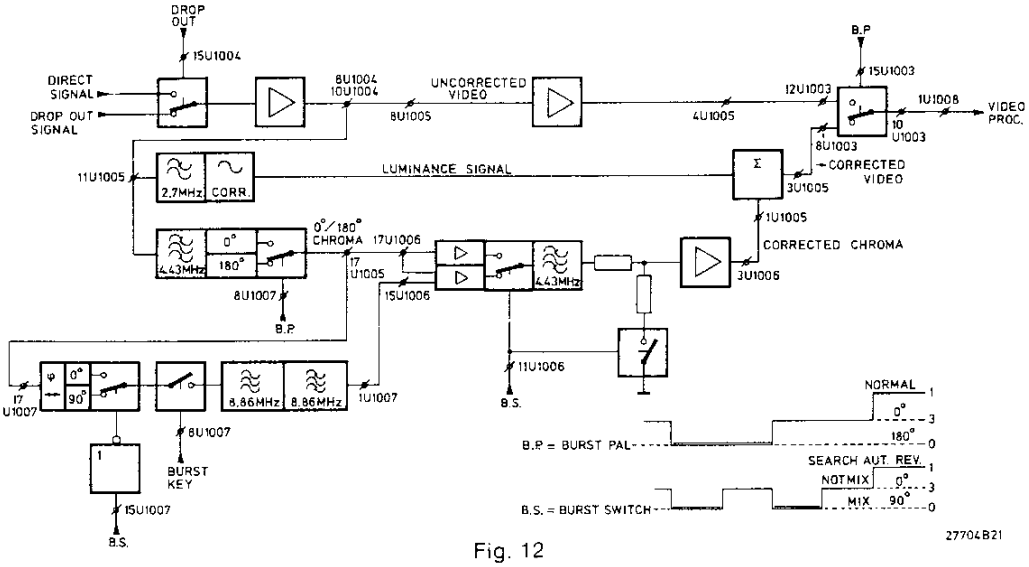

Fig. 12

The video signal from pin 10 on U1004 enters unit U1005 on pin 11. In U1005 the luminance and chrominance signals are separated by means of a low-pass filter (2.7 MHz) and a band-pass filter (4.43 MHz). The luminance signal flows via a group delay correction network to an adder circuit in U1005.
The chroma signal is via an amplifier stage fed to the controllable phase-shifter. The phase-shifter is controlled by the Burst PAL pulses which enter at pin 15 of U1005.
The 0°/180° chroma signal goes from pin 17-U1005 to pin 17-U1006. In U1006 the 0°/180° chroma signal is mixed or not with the 8.86 MHz signal that enters U1006 on pin 15. After the controlled mixer stage the signal passes through a 4.43 MHz band-pass filter.
Subsequently, the signal is amplified. Since - during mixing - the 4.43 MHz signal has been reduced to one half its value with respect to the situation of non-mixing, a voltage divider is connected in circuit in the latter case. After this voltage divider we find a 8.86 MHz absorption circuit and an emitter-follower. The corrected chroma signal appears on pin 3 of U1006.
Mixing or non-mixing, as well as switching of the voltage divider are operations commanded by the Burst Switch pulses which enter U1006 on pin 11.
The corrected chroma signal flows from pin 3 in U1006 to pin 1 on U1005. From here the signal is fed to the adder circuit in U1005 where it is added to the luminance signal.
The corrected video signal flows via pin 3 on U1005 to pin 8 on U1003 and via the switch in this unit to pin 10 on U1003.
From here the corrected video signal follows the normal path.
The 8.86 MHz signal is generated in U1007. This unit includes a 8.86 MHz crystal oscillator controlled by the burst and the 90° phase-shifting circuit.

The Figures below once again explicitly show the chroma correction for the special playing modes. First of all the correction in case of fast motion (Figs. 13a and 13b).

Fig. 13a shows the jumps across the tracks. In Fig. 13b we successively find the normal chroma signal, the chroma signal after the jumps, the Burst PAL signal that drives the 0° or 180° correction, the chroma signal after the 0° or 180° correction, the Burst Switch signal that drives the 0° or 90° correction and the completely corrected chroma signal. In the lower part of Fig. 13b the R-Y phase correction is shown.
We see that after the first jump the signal of track 2b is scanned. This signal has a phase-shift of 90° relative to track 1b.
After the second jump track 4a is scanned; the phase shift is 180° with respect to track 2a. After the third jump track 5b is scanned; phase shift 270° relative to track 2b. After the fourth jump track 7a is scanned; phase shift 360° = 0° with respect to track 3a, etc...
After the 0° or 180° correction we see that there remains alternately a 0° or 90° phase error. After the 0° or 90° correction we have again a normal chroma signal.
In the lower part of Fig. 13b the R-Y phase correction is shown. The R-Y phase alternately shows an error of 0° and 180°. We find that the 180° error situation coincides with a 90° phase error of the subcarrier.
As we have seen before, in case of a 90° subcarrier correction the R-Y phase also shifts by 180°, thus giving a correct R-Y phase.

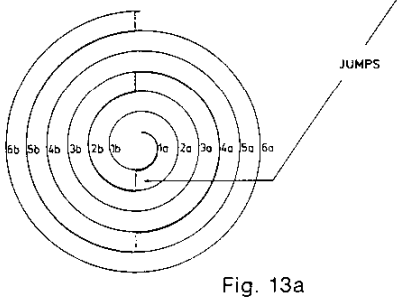

Fig. 13a

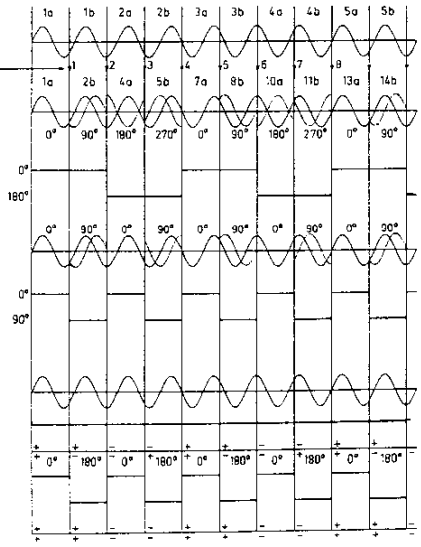

Fig. 13b

FOR SERVICE MANUALS
CONTACT:
MAURITRON TECHNICAL SERVICES
www.mauritron.co.uk
TEL: 01844 - 351694
FAX: 01844 - 352554

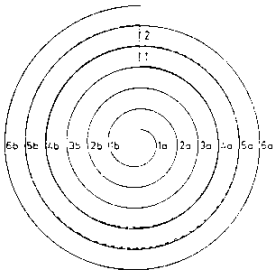

Fig. 14a

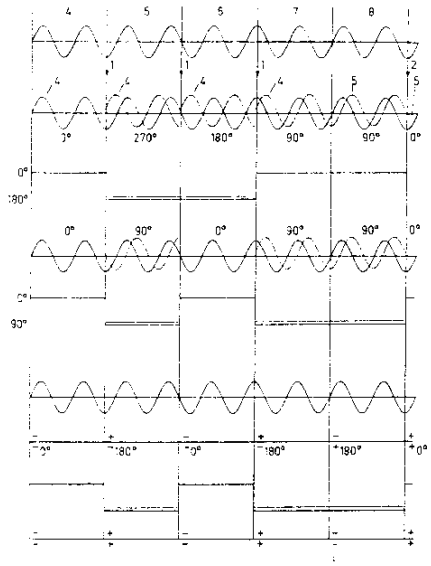

Fig. 14b

The Figs. 14a and 14b show the situation for still picture and slow motion. The successive jumps now take place from the outside to the centre, so that the phase change is now 270°-180°-90°-0°.
While passing from track 4 to track 5 no jump occurs and consequently no change in the phase error present at that moment.
The Burst PAL and Burst Switch signals are adapted accordingly.

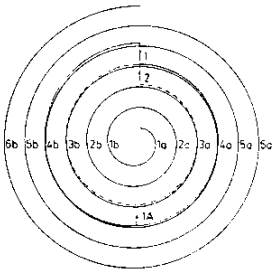

Fig. 15a

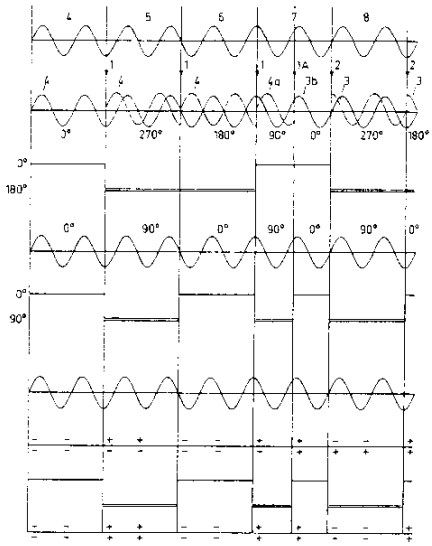

Fig. 15b

Figs. 15a and 15b show the situation for still picture and slow motion reverse.
The phase change at the successive jumps is now again 270°, 180°, 90°, 0°, etc.
When passing from track 4 to track 3 there is an additional jump on a frame.
The Burst PAL and Burst Switch pulses are also adapted in this case.

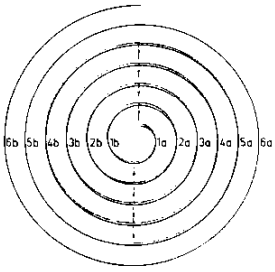

Fig. 16a

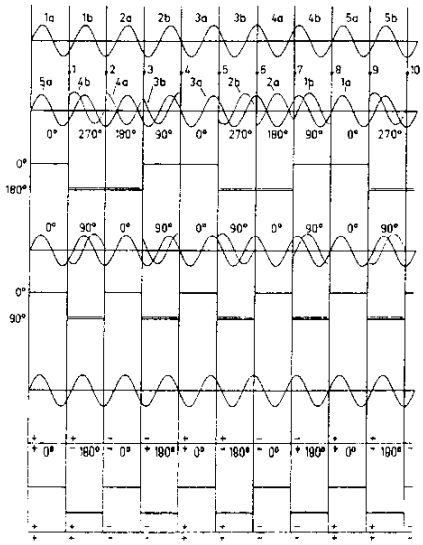

Fig. 16b

Figs. 16a and 16b show the situation for reverse play.
The phase change after each jump is again 270°-180°-90°-0°, etc.

Colour separator U1011

In this unit the special burst and the colour burst are filtered out of the video signal.
The special burst serves to control the time error compensation. The colour burst's amplitude determines the value of the MTF voltage which is used in the RF processor U1001 to adjust the frequency response of the RF video amplifier.
The video signal enters the unit at pin 17. The signal is passed on to a tuned amplifier (3.75 MHz). The amplified 3.75 MHz signal is fed via a limiter (TCA420A) and an amplifier to pin 1 of the unit.
The video signal is also presented to the second tuned amplifier (4.43 MHz) that amplifies the colour signal.
This signal is fed via FET 6010, acting as switch, to peak detector TS6011 and via an emitter follower to pin 11 of the unit.
FET 6010 is controlled by the burst key pulse so that the amplitude of colour burst solely determines the value of the MTF voltage.

Reference control U1012

The reference control unit provides the following signals:
the MCO (motor control) signal for driving the turntable motor, the tangential loop switch signal, a reference signal having a frequency of 15625 Hz (line frequency) for the tangential servo, the sync signal for the sequence logic and the control module, the burst key pulse for the colour separator and the subcarrier regenerator, the clipped video signal for the control module and the line pulses for the sample detector and the control module.
All these signals are made in IC6011. The IC contains a crystal-controlled oscillator at a frequency of 4.5 MHz, followed by a 1:288 divider. This divider provides the 15625 Hz reference signal (pin 1 on unit). Furthermore, the IC contains a sync separator that provides the sync signal of the video signal which enters the unit at pin 17 (pin 3 on unit). In the IC, frequency and phase of the line sync pulses are compared with the reference pulses.
The resultant signal is the motor control signal (MCO pin 11 on the unit). If the motor speed is too high, pin 11 is high; if the motor speed is too low, pin 11 is low.
At correct rotational speed the signal on pin 11 is a square-wave voltage with the line frequency. The duty cycle is determined by the phase difference between the line sync pulses and the reference pulses.
At the moment that the motor speed is correct, the IC supplies a lock signal that - via TS6007 and TS6006 - renders pin 12 of the unit high. This is the tangential loop switch signal. The tangential loop switch signal may assume 3 levels: high, medium and low. In search position and in automatic reverse position at the end of the disc the burst switch signal that enters the unit at pin 16 is high. TS6009 is then conducting and R3012 + R3033 constitute a voltage divider. The tangential loop switch signal assumes then the medium level.
The IC equally provides a positive pulse at the back porch of the line sync pulse. Via inverter TS6008 this pulse is presented to pin 8 on the unit. This is the burst key pulse.
The line sync pulses on pin 10 of the unit are protected against drop-outs in the video signal. In the event of a drop-out the signal is filled by the reference signal.

Sample detector U1013

In this unit pulses having the line frequency are made and coupled to one of the last zero crossings of the special burst signal on the line sync pulse (3.75 MHz). These pulses are used as sample pulse in the tangential phase detector. The line-frequency pulses coming from pin 10 of the reference control enter the unit at pin 17. The negative edge of this pulse triggers the monostable multivibrator 6013A. The pulse on pin 5 of 6013A triggers monostable multivibrator 6013B. The pulse appearing on pin 13 of 6013B activates monostable multivibrator 6012 on input 4 so that this monostable multivibrator is triggered each time a negative edge of the limited special burst signal is presented to input 3. On output 1 of 6012 a pulse having a time duration of 7 μsecs is present; this pulse is always coupled to the same zero crossing of the special burst signal.
The pulse on pin 1 of 6012 is also used to reset 6013B so that 6012 becomes inactive and is only reactivated after the next line pulse on pin 17.
The negative edge of the pulse on pin 5 of 6013A is - by means of feedback on the time constant of 6013A - always put between two negative-going edges of the special burst signal, thus ensuring that the same zero crossing is used to trigger 6012.
The Figure 17 shows the various pulses and their mutual relationship.

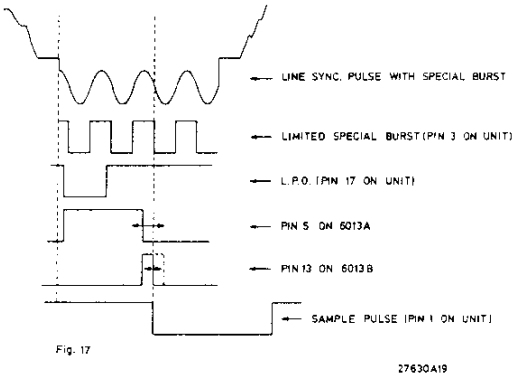

Fig. 17

Tangential phase detector U1014

The tangential phase detector forms part of the tangential servo circuit. In this unit the phase of the reference pulse (15625 Hz) from U1012 is compared with a pulse extracted from the video signal and, as a result of this, containing time base errors.
The reference pulse enters the unit at pin 3. By means of IC 6017 this pulse is shaped to a sawtooth voltage.
The sample pulse enters the unit at pin 1. Via an inverter TS6012 this pulse reaches the gate of TS6013. During the time that TS6013 is conducting, C2008 is charged to the instantaneous value of the sawtooth voltage.
This voltage is amplified in IC6018. The signal appearing on pin 15 of the unit is an exact measure of the time base error in the video signal.

FOR SERVICE MANUALS
CONTACT:
MAURITRON TECHNICAL SERVICES
www.mauritron.co.uk
TEL: 01844 - 351694
FAX: 01844 - 352554

Search adapter U1015

The search adapter ensures that during search forward and search reverse a number of pictures are displayed thus allowing quick retrieval of a given passage.
In search mode the slide motor receives a constant control voltage and the slide moves rapidly under the disc.
The light beam follows the track by means of the radial mirror until the latter has reached a preset maximum deviation.
The control signal for the mirror then opens the radial loop switch in U1017. The mirror now moves to its neutral position and - as a result of its speed - practically to the opposite extreme position. At the moment that the mirror's speed is almost zero, the radial loop switch is closed again and the mirror (light beam) may again follow the track until the next maximum deviation occurs.
The entire process is realised by the search adapter in the following manner. The stroke limit signal from U1017 enters the unit at pin 14. The signal may be positive or negative, dependent on the direction of the search mode.
In the case where the signal is positive, the bistable multi-vibrator IC6026A is set and the output becomes high.
Pin 10 of the unit becomes high and this signal opens the loop switch in U1017.
In the case that the signal is negative, the bistable multi-vibrator IC6026B is set. The output becomes high. Pin 10 on the unit becomes high, etc...
The mirror moves towards its neutral position and as a result of its speed to almost the opposite extreme position.
During this swing the light beam passes approximately 100 tracks. At each passage of a track the clipped radial signal first becomes positive and then negative (or the other way round, dependent on the direction of motion of the mirror). Consequently, C2005 and C2008 are charged in turn. R3007 and R3023 are so high that the bases of TS6019 and TS6020 both remain positive and both transistors are cut off.
When the mirror approaches its maximum point of deviation, the mirror's speed decreases and also the frequency of the clipped radial signal decreases. C2005 and C2008 become charged less and less; when the mirror's speed is almost zero, either C2005 or C2008 will have discharged via R3007 or R3023 respectively to such a level that either TS6019 or TS6020 starts conducting. Thus 6026A or 6026B becomes reset. The output becomes low. Pin 10 on the unit becomes low and the radial loop switch in U1017 is closed.
The mirror is capable of following the track until the next maximum deviation occurs, and so on.
To ensure reliable capture of the radial servo, a second circuit has been accommodated in the search adapter. This circuit serves to brake the mirror during its rebouncing motion to the opposite extreme position.
For this braking action, a voltage is supplied to the mirror each time the light beam passes a track, thus opposing the mirror's displacement. Dependent on the direction of motion, this voltage is positive or negative. This signal is obtained by opening and closing the radial loop switch at the right moments.
To obtain correct timing, use is made of two signals, the clipped radial signal on pin 12 and the RF audio signal on pin 1.
These two signals have a 90° phase shift; the phase-shift may be leading or lagging, dependent on the direction of motion of the light beam (mirror).
Figure 18 shows a complete track passage with the associated amplitudes of the radial difference signal and the RF signal (A). It clearly shows that in one direction the radial difference signal is lagging relative to the RF signal and leading in the other direction. The RF signal is amplified, limited, rectified and inverted.
The clipped radial signal is rectangular (refer to B).

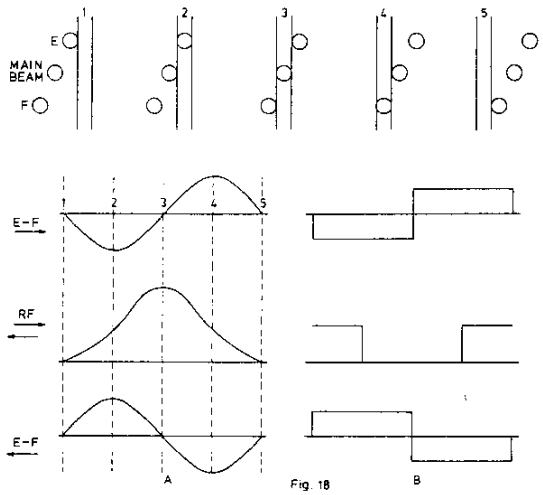

Fig. 18

27622A19

The rectified and inverted RF signal is presented to both C_D inputs of the double D-type flip-flop IC6025.
The clipped radial signal is fed to the clock input on 6025A and - via an inverter - to the clock input on 6025B. Both D-inputs are connected to +1 and, consequently, always high. The two S_D inputs are grounded and thus always low.
The Q outputs are connected via R3030 and R3029 to pin 10 on the unit.

Inputs				Outputs	
S_D	C_D	C_P	D	Q	$\bar{Q}$
H	L	X	X	H	L
L	H	X	X	L	H
H	H	X	X	H	H

Inputs				Outputs	
S_D	C_D	C_P	D	Q_{n+1}	$\bar{Q}_{n+1}$
L	L	∫	L	L	H
L	L	∫	H	H	L

H = high level
L = low level
X = level irrelevant
∫ = positive-going edge
Q_{n+1} = level after positive-going clock pulse

In Figure 19 CP1 and CP2 and CD inputs are drawn below each other. The truth tables allow to see that each time the light beam passes a track the output Q is high for a quarter period; this implies that the loop switch is opened. During the rest of the period the loop switch is closed. The result is that the mirror receives a negative or positive voltage that brakes the movement of the mirror.

FOR SERVICE MANUALS
CONTACT:
MAURITRON TECHNICAL SERVICES
www.mauritron.co.uk
TEL: 01844 - 351694
FAX: 01844 - 352554

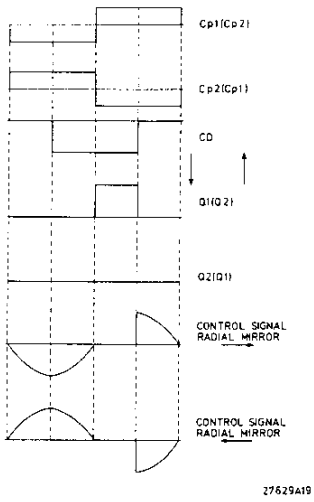

Fig. 19

Focus drive U1016

The focus drive unit ensures that the objective is brought into focus at the start of the disc and kept into focus during read-out of the disc.
The signals required are supplied by the pre-amplifier (focus error signal) and the sequence logic (focus loop switch signal).
The focus error signal enters the unit at pin 1; the focus loop switch signal enters the unit at pin 15. The latter signal is high at the moment the disc is started (+9 V). TS6020 is conducting and grounds the bases of TS6021 and TS6022 via D6007 for positive signals.
Input 6 on IC6031 is positive via D6008-D6014 and R3019.
Output 7 on IC6031 is negative. Input 2 on IC6031 is negative via D6009 and R3016 and output 1 is positive; however, this remains without any effect, since this positive voltage is shorted via D6007 and TS6020.
Output 4 on the unit is low via R3035. D6013 is conducting and the voltage at pin 4 is —0.7 V.
As soon as the sequence logic receives the signals "laser on" and " rotational speed ≥ 1400 rpm", the focus loop switch signal becomes low. TS6020 is cut off and input 6 on 6031 becomes low. Output 7 on IC6031 becomes positive and D6009 is cut off.
The focus error signal has a positive level, from the pre-amplifier. Input 2 on IC6031 becomes positive and output 1 negative.
TS6022 and TS6024 start conducting and pin 17 on the unit becomes negative. The objective, connected between pin 17 and ground, moves upwards. R3032 and the feedback via R3026 ensure that the movement is uniform.
As soon as TS6022 starts conducting, TS6027 is equally driven into conduction. Input 6 on IC6031 becomes negative. The output becomes positive.
Output 4 on the unit now becomes positive (+9 V). This is the in-focus signal for the sequence logic.
Zener diode D6010 starts conducting and opens TS6026 so that R3032 is shorted.
The focus error signal now drives the objective so that the latter follows the variations in the disc.
The focus error signal is equally presented via R3003 to the input 2 on IC6030A. The signal is amplified and subsequently limited in positive and negative direction by the diodes D6001 up to and including D6004. The signal is amplified once again by IC6030B. On pin 7 of IC6030 appears a square-wave signal. This signal is rectified by D6005 and D6006. The resulting DC voltage drives TS6025. This transistor acts as a variable resistance parallel to R3026 and R3027. The input signal on pin 2 of IC6031 is controlled by this transistor circuit.

Radial drive U1017

The radial drive unit provides the drive signal for the radial mirror. The signal required is supplied by the two radial photodiodes. The difference signal of both diodes is amplified in pre-amplifier U1000 and appears on pin 1 of U1017.
The radial difference signal is amplified in IC6015. The output voltage is limited by the diodes D6001/D6003 and D6002/D6004. The gain may be adjusted with R3014. Via TS6011, acting as a switch, the signal flows to a second amplifier, IC6016. The output signal of this amplifier drives the output stage constituted by TS6012 and TS6014.
The signal is now fed, via pin 17 on the unit, to the mirror coil and from here via pin 16 on the unit and via R3027 to ground.
The output signal of the output stage is present across the potentiometer R3033. From the wiper of this potentiometer the signal flows via the voltage divider R3034 and R3035 to pin 14 on the unit. This is the stroke limit signal that drives the slide drive and the search adapter.
The amplitude of the stroke limit signal is adjustable with R3033. Via the frequency-dependent network R3032-C2008-R3028-R3026-C2006-R3025 and R3021 part of the output signal is fed back as feedback signal to the inverting input of IC6016. The signal across R3027 is also fed via R3023-C2005 and R3022 to the inverting input of IC6016.
To this input are presented - during the special playing modes - the course pulses coming from the mode control module; these pulses drive the mirror in such a way that the light beam jumps to the next track or the preceding track.
Switch TS6011 is driven by the signals on the pins 15, 12 and 11 of the unit. During normal play pin 15 is driven low by the sequence logic, so that TS6011 is via TS6009 and TS6010 driven into conduction.
During the search mode the brake pulses from the search adapter arrive at pin 12. During the special playing modes pin 11 is driven high by the mode control module during the jump from one track to the preceding one or to the next one so that TS6011 is cut off during this period of time.

Slide drive U1018

The slide drive unit serves to drive the slide motor.
During normal play this motor has to take care that the slide slowly moves from the centre to the outside. In normal play reverse the direction of motion is the other way round, whereas during search forward or search reverse and at the end of the disc the slide has to be transported very quickly.
To perform these functions the slide drive unit receives two signals. At pin 14 on the unit the stroke limit signal from pin 14 of U1017 enters the unit. This signal indicates that the radial mirror is deviating maximally and transport of the slide is required. During normal play forward this signal is negative. The signal is amplified in IC6012B. Via R3005 the signal flows to input 2 on IC6012A. This input is connected with the diodes D6001/D6002 and D6003/D6004. Junction D6001/D6003 is connected with junction R3008/R3009. In conjunction with R3007 these resistors constitute a voltage divider between + and —12 V. During normal play, when no signal is applied to junction R3007/R3008 (pin 3 on the unit), the junction R3008/R3009 is at zero potential. The diodes D6001/D6002 and D6003/D6004 limit the signal on pin 2 of 6012A in positive and negative direction. The output signal of IC6012A is via R3011/R3012/R3013/R3014 fed to input 13 on IC6012C. This amplifier drives the output stage TS6008 and TS6009. The signal on the bases of these transistors are limited in positive and negative direction by the zener diodes D6005 and D6006.

From the emitters of TS6008 and TS6009 the signal is applied to the slide drive motor and from the motor via the contacts 0 and 1 of the limit switch and R3020 to ground.
Via R3019 and C2004, the voltage across R3020 is fed to input 12 on IC6012C as feedback.
At the end of the disc pin 3 on the unit becomes high (12 V).

The junction R3008/R3009 is now approximately +4 V. This voltage is now applied via the diodes D6001 and D6002 to input 2 of IC6012A. The direction of rotation of the motor is reversed and as a result of the high control voltage on pin 2 of IC 6012A speed is maximum.
The slide is now transported back at high speed to the beginning of the disc. The same thing occurs when the eject key is actuated.
The slide will now also return to the beginning. The current for the slide motor is interrupted by the limit switch and the motor is shorted via D2 so that the motor is braked.
At re-start to the player pin 16 on the unit is again negative and the motor receives ist current via diode D1. The limit switch assumes its normal position. During search reverse pin 3 on the unit also becomes high and the slide is transported inwards. In search forward mode pin 3 on the unit becomes 0 and approximately —4 V is applied to pin 2 on IC6012A via the diodes D6003 and D6004.
The slide will now rapidly move to the outside.

Tangential drive U1019

In the tangential drive unit the tangential drive signal coming from the tangential phase detector is amplified and via an output stage applied to the tangential miror. The unit contains the tangential loop switch that switches on or off the tangential servo.
The loop switch is controlled by the tangential loop switch signal provided by the reference control unit. This signal enters the unit at pin 17. The tangential loop switch signal may assume one of three levels: low, medium and high. At low level the loop switch is opened, at medium level or high level the loop switch is closed and the tangential servo is switched on.
The tangential control signal enters the unit at pin 16. The signal is amplified by TS6010; the gain of TS6010 depends of the level (low or high) on the tangential loop switch signal. If the loop switch signal is at medium level, TS6009 constitutes a low resistance parallel to R3004 and the gain is low. If the loop switch signal is at high level, TS6009 is cut off and the gain is high. The tangential control signal flows via TS6011 and the loop switch to IC6021A where it is amplified. The gain is adjustable by means of R3025.
The level, TS6009 is cut off and the gain is high. The tangential control flows via TS1011 and the loop switch to IC6021A where ist is amplified. The gain is adjustable by means of R3025.
The signal is amplified once more in IC6021B. The output of this amplifier supplies the tangential cross signal. As soon as the average value of this signal becomes positive or negative, the turntable motor's rpm is corrected until the average value of the tangential cross signal is again zero.
The output signal of IC6021A arrives via C2008 at the base of TS6013. From the collector of this transistor the signal goes to the base of TS6016. The signal on the collector of TS6016 drives the output stages TS6017 and TS6018. The output signal of the output stage is applied via R3040, C2013 and R3041 to the mirror coil.
Part of the output voltage is applied via the voltage divider R3039-R3034-C2010 and R3032 to the base of TS6015.
The signal on the common emitter resistor of TS6013 and TS6015 decreases the gain of TS6013.

Via switch TS6014, which is conducting during read-out of a CAV disc, the slide position switches connect, dependent on the scanning radius, no resistance or a resistance of 82 kΩ, 33 kΩ or 17.8 kΩ respectively parallel to R3032.
The amplitude of the signal on the base of TS6015 decreases and the gain of TS6013 increases.
Pin 4 on the unit is high during play of a CAV disc so that TS6014 is conducting. During play of a CLV disc pin 4 becomes low as soon as the turntable's rpm is < 1400 rpm.
TS6014 is cut off and the diameter correction is switched off.

Sequence logic U1020

The sequence logic ensures that the focus and radial servo are switched on in the right order and provides the motor locked signal to the motor drive when the turntable motor has reached the correct number of revolutions per minute.
To perform this job the sequence logic receives various signals, i.e. on pin 26 the sync signal from the video signal on the disc, on pin 15 a signal from the tacho circuit indicating that the turntable motor's rpm is ⩾ 1400 rpm, on pin 4 a signal from the laser and from the tacho circuit indicating that the laser is on and the turntable motor's rpm is ⩾ 400 rpm, on pin 3 a signal from the pre-amplifier indicating that the photodiodes receive light and on pin 2 a signal from the focus drive indicating that the objective is in-focus.
When the player is started, the pins 2, 4 and 15 are low and pin 3 is high. As a result of this, pin 4 on IC6023B is high. When the laser is on and the speed of the turntable motor is ⩾ 400 rpm, pin 4 on the unit becomes high and - after the turntable motor has acquired a speed of 1400 rpm - pin 15 on the unit equally becomes high.
The bistable multivibrator IC6022B-D is set.
Pin 8 on IC6023C becomes high, pin 9 on this IC is already high (through pin 4 on IC6023B) and pin 10 on IC6023C becomes low; pin 8 on the unit will thus also become low.
This is the focus loop switch signal that switches on the focus servo.
After the objective has reached the in-focus position, pin 2 on the unit becomes high. Pin 3 on the unit becomes low (via the pre-amplifier) thus stating that the photodiodes receive a sufficient amount of light. Pin 4 on 6023B remains high. Since pin 2 on the unit is high, pin 1 on the unit will become low via inverter IC6023A. This is the radial loop switch signal that switches on the radial servo.
If the objective does not reach the in-focus position, pin 3 remains high, pin 4 on IC6023B becomes low, pin 9 on IC6023C becomes low and pin 10 on IC6023C becomes high.
The focus loop switch signal becomes high. Pin 2, providing the in-focus signal, becomes low and pin 4 on IC6023B becomes a gain high, so that the focus loop switch signal will again become low.
Becoming high and low of the focus loop switch signal is delayed by the circuit consisting of IC6023D, C2004, C2003, D6003, D6004 and D6005 with their associated resistors R3011-3012-3013-3014-3015 and 3017.
The sync signal on pin 16 is amplified and fed to the tuned circuit L5001-C2012. This circuit is tuned to 15625 Hz.
When the frequency of the sync pulses is correct (15625 Hz), the voltage across the circuit will strongly increase. This AC signal is rectified and the resulting negative voltage cuts off TS6019. The collector becomes high and via inverter IC6022A the output 17 on the unit becomes low. This is the motor locked signal.

Mode control module U1021

The mode control module is the players's control centre. The key component in this module is a special IC, type SAA1083. This IC provides all signals required for the control of the player.
The IC scans the control panel and provides outputs with the signals required for proper execution of the given commands.
To enable the module to work properly various signals have to be applied to it. These are: the radial position signal, the sync signal, the motor locked signal, the clipped video signal and pulses with the line frequency. When the players' lid is closed, a reset signal is applied. The IC is driven by a clock oscillator which is synchronized by the line frequency pulses. A second oscillator ensures the control of the slow motion.
The frequency of this oscillator is adjustable by means of the slow motion control on the control panel.
At the outputs of the module the following signals appear:
the clipped radial signal for the search adapter, the video mute signal that serves to switch off the signal to the modulator as long as the player has not yet reached to correct turntable speed, the radial loop signal that opens the radial loop switch in U1017 at the correct moments during still picture mode, slow and fast motion, the course pulses which order the radial mirror to make a jump during the special playing modes, the burst switch pulses and the burst PAL pulses required for chroma correction during special playing modes, the index signal that is added to the video signal in the video processor for display of the index, a drive signal for the slide drive unit in search mode and the audio 1 and 2 mute signals. The audio mute signals serve to switch on and off the two audio channels. These channels are automatically muted until the player's turntable has reached normal speed and during the special playing modes. During normal play the audio keys on the control panel enable switching on and off of the audio channels is desired.
The module also drives the indicator LEDs on the control panel.

Power supply

The power supply provides the various different voltages required for proper operation of the player, viz. + and —12 V regulated for the supply of the video servo PC-board, + and —20 V for the turntable motor supply and 1100 V for the laser.
The +12 V power supply is carried out as switch-mode supply.
The control pulses required are supplied by an astable multivibrator (TS7114 and TS7115).
The reference voltage is made across diode 7103 and zener diode 7102. The output voltage is adjustable by means in R3115.
The —12 V is a series-controlled power supply. As reference voltage the +12 V is used.
The + and —12 V power supplies are provided with an overload protection that functions mutually.
In the +12 V power supply the parallel circuit consisting of R3103-R3104 and R3105 constitutes the measuring resistance. Too strong a current through this resistor drives TS7111 and TS7110 into conduction so that TS7109 and TS7108 are cut off. The +12 V is switched off; as a result of this, the reference voltage for the —12 V power supply also disappears so that the —12 V supply is equally switched off.
In the —12 V power supply, R3122 forms the measuring resistance.Too strong a current through this resistor brings TS7113 into conduction and, consequently TS711 and TS7110 also start conducting. The +12 V power supply is switched off and, as a result of this, also the —12 V power supply.

The laser supply is a DC-DC converter. Pulses coming from the astable multivibrator TS7114 and TS7115 open and close output transistor TS7212 via TS7210 and 7211. During the time that TS7212 is conducting, the current flowing through the primary winding of transformer 5003 increases sawtooth-like.
When the current flow through TS7212 is blocked, high voltage peaks are generated in the secondary winding of transformer 5003; these peaks are rectified by the multiplier.
The no-load output voltage of the multiplier is approximately 10 kV. This voltage is sufficiently strong to ignite the laser. As soon as current flows through the laser, the voltage drops to approximately 1100 V, being the laser's operating voltage, due to the internal resistance of the multiplier.
The laser cathode is grounded via R3202, R3203 and R3204.
The voltage in the junction R3202-R3203 drives transistor TS7209. This transistor controls the duration of conduction of TS7210 and, consequently, that of TS7211 and TS7212. When the current through the laser increases, the base voltage of TS7209 goes up.
TS7212 will then be conducting for a shorter while and less energy is supplied to transformer 5003. The output voltage decreases and the laser current decreases, the base voltage of TS7209 decreases, and so on. In this way the laser current is regulated. R3202 is adjustable; it allows to set the laser current to the correct value (5 mA). The voltage on TP2 is then 5 V.

Turntable motor control

The rotational speed of the turntable motor is controlled by a switching circuit. The control pulses required are provided by an astable multivibrator TS7114 and TS7115.
This signal, that is more or less sawtooth-shaped after passage of R3314, R3316 and C2308, appears at the bases of TS7311 and TS7312. The DC level on these bases determines which transistor is conducting.
If the DC level is high, TS7311 is conducting and via TS7313 and TS7315 current will flow through the motor.
If the DC level is low, TS7312 will be conducting. This transistor drives TS7314 and TS7316 into conduction.
TS7616 constitutes a load across the motor to brake the latter one.
The DC level is determined by TS7310. This transistor is driven by the MCO signal originating from the reference control unit.
In the reference control unit this signal is generated by a frequency and phase comparison of the line sync pulses of the video signal and the pulses with the line frequency from a crystal oscillator.
If the line frequency is lower than the frequency of the reference pulses, the MCO signal will be low. TS7310 will then be conducting and the base of TS7311 is high so that more energy is fed to the motor which will start rotating faster.
When the line frequency is higher than the frequency of the reference pulses, the MCO signal will be high. TS7310 is cut off and the base of TS7312 is low.
TS7312 is conducting and, as a result of this, TS7316 brakes the motor.
When the line frequency equals the reference frequency, the MCO signal will be rectangular. The duty cycle is determined by the phase difference between line sync pulses and reference pulses.
The base of TS7311 is set by TS7310 to allow sufficient energy to be fed to the motor in order to keep the rotational speed constant.
When playing a CLV disc, the energy supplied to the motor gradually decreases so that the rotational speed decreases.

The linear velocity of the track on the disc relative to the scanning light beam now remains constant.
The motor circuit includes switch B which - at the same time as switch A - is actuated by the lid. When the lid is closed the points 1 and 3 on both switches are interconnected.
The motor circuit is now closed and the —20 V supply voltage is fed to the H.T. generator; the locking magnet is energized.
When the eject knob is actuated, both switches are changed over and the points 1 and 2 are interconnected. Switch A interrupts the —20 V supply voltage to the H.T. generator and the power supply for the locking magnet. Switch B interrupts the motor circuit and connects the motor parallel to the locking magnet.
The motor now acts as a generator and keeps the locking magnet energized until the speed has dropped below 100 rpm.
Now only the lid can be opened.
A tacho generator is coupled to the turntable motor. At the nominal speed of 1500 rpm this generator provides a signal having a frequency of 450 Hz. This signal is amplified in IC7408 and re-shaped to a pulse-shaped signal with a steep negative-going edge.
The monostable multivibrator TS7410 and TS7411 is triggered by this negative-going edge.
In the quiescent state TS7411 is conducting. The collector is positive and TS7412 is also conducting.
When the monostable multivibrator is triggered, TS7411 is cut off. The collector becomes negative via R3411.
C2404 is charged via R3412. When the monostable multivibrator reassumes its stable state, C2404 is discharged via R3412.
During the period of time that the speed is still low, C2404 will be charged weakly. TS7412 is conducting. All the junctions of the voltage divider R3415-R3416-R3421 and R3420 are positive. As speed increases, C2404 will be increasingly charged, see Fig. 20.

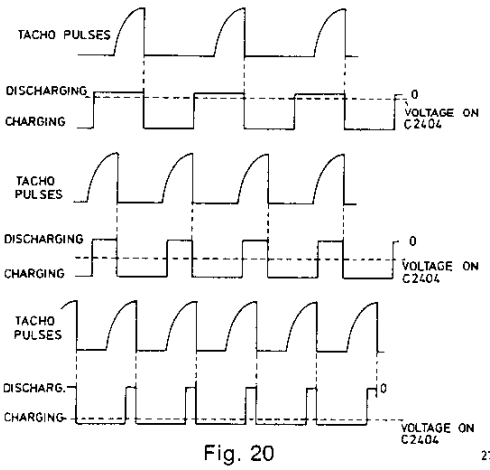

Fig. 20 27621A19

The current through TS7412 will now decrease. At 400 rpm the voltage on junction R3415-R3416 becomes negative.
TS7417 is cut off, the collector becomes high (if the laser is on).
This signal instructs the sequence logic that the laser is on and the speed is > 400 rpm. At 600 rpm the voltage on junction R3416-R3421 becomes negative.

As a result, TS7414 is cut off. At 1400 rpm the voltage on junction R3421-R3420 becomes negative. This signal instructs the sequence logic that the speed is > 1400 rpm.
If the speed increases still further, TS7412 will be cut off as soon as 1600 rpm is attained. The emitter becomes negative. Consequently, TS7413 is cut off. The collector of this transistor becomes high. Via D7402 the base of TS7310 becomes positive. The motor is braked.

Remote control (RC)

Transmitter

In the RC transmitter the command keyed-in is converted into a coded infrared light signal. This coding takes place in IC7001. The IC is driven by the built-in oscillator (frequency: 170.5 kHz).
By means of the switches on the keyboard the points X_0, X_1 and X_2 are interconnected with the points Y_0, Y_1, Y_2 or Y_3.
At the output pin 5 on IC7001 a pulse train will now be available. This pulse train contains the information of the given command. The monostable multivibrator IC7002A-7002B ensures that the pulses have the correct width. By means of the NAND gate IC7002C the modulating signal (frequency: 170.5 kHz) is switched by these pulses. Via inverter IC7002D, TS7003 is driven and, in its turn, drives TS7004. In the collector circuit of TS7004 the four LEDs D7007÷D7010 which emit the modulated pulse train as infrared light, are included.
The entire circuit is operative as long as a key is kept depressed and the battery only supplies current during this period of time.

Receiver

In the RC receiver the coded infrared light signals are converted into the signals required for operating the player.
The infrared light falls on the photodiode D7001.
The cathode circuit comprises a circuit tuned to a frequency of 170.5 kHz and constituted by the primary winding of L5001 and C2001. From the secondary winding of L5001 the signal is fed to TS7020 and then to TS7021.
The collector circuit of TS7021 also comprises a circuit tuned to a frequency of 170.5 kHz (L5002-C2005-R3013).
The base adjustment voltage of TS7020 is obtained via R3005 from the emitter voltage of TS7021; this constitutes an AGC. Via C2004 the signal arrives at the base of TS7022 and from the collector of TS7022 on the base of TS7023. Here also the base adjustment voltage of TS7022 is obtained via R3009 and D7005 from the emitter voltage of TS7023.
Via C2006 the signal arrives at the base of TS7024 and from the collector of TS7024 via C2007 at diode D7002. The signal is rectified and flows via emitter follower TS7025 to the pulse shaper constituted by TS7026 and TS7027.
The pulse trains now flow to the input, pin 11 on IC7012. On pin 13 appear the clock pulses generated by oscillator IC7011.
At the outputs A, B, C and D appear the decoded signals that drive the switches in IC7013 and IC7014.
These switches are connected parallel to the switches on the keyboard.
The two audio channels and the slow motion reverse are not switchable with the RC unit.

VIDEO SERVO PANEL

BC548A		4822 130 40948
5001	τ = 64 µsec	4822 218 20193
5002,5003	τ = 465 nsec	4822 157 50887
5004	2.3 µH	4822 157 51185
2001	68 µF - 16 V	4822 124 20689
	27 pF - 2%	4822 122 30045
	47 pF - 2%	4822 122 31072
	82 pF - 2%	4822 122 31243

SWITCH PANEL

		4822 276 10856
BAW62		4822 130 30613
BZX75/C1V4		4822 130 34047
3001	100 kΩ Log.	4822 105 10414

LED PANEL

CQY24		4822 130 31314
BZX79/C5V6		4822 130 34173

U1021 MODE CONTROL MODULE

HEF4528BP		5322 209 14191
LM393N		4822 209 80797
SAA1083P		4822 209 80795
BC547		4822 130 44257
BC548		4822 130 40938
BC558		4822 130 40941
BC559		4822 130 40963
BC559B		4822 130 44358
BF494		4822 130 44195
BAW62		4822 130 30613
BZX75/C2V1		4822 130 34049
BZX79/C4V7		4822 130 34174
5001	3.5 µH	4822 156 10518
5002	2.5 mH	4822 158 20377
3077	100 Ω NFR25	4822 111 30535
2004	430 pF	5322 121 54129
2009,2010	2.2 nF - 5% - 63 V	4822 121 50415
	33 pF - 2 %	4822 122 31067
	180 pF - 2 %	4822 122 31352
	220 pF - 2 %	4822 122 31506
	270 pF - 2 %	4822 122 30107
	270 pF - 2 %	4822 122 31168
	470 pF - 2 %	5322 122 34159
	1 nF - 10 %	4822 122 31175
	1 nF –20+80 %	4822 122 30027
	3.3 nF - 10 %	4822 122 30099
	10 nF –20+50 %	5322 122 34041
	22 nF –20+80 %	4822 122 30103
	100 nF - 10 %	4822 121 41161
	330 nF - 10 %	4822 121 40434

Remarks: See also the diagrams of the relevant printed boards

FOR SERVICE MANUALS
CONTACT:
MAURITRON TECHNICAL SERVICES
www.mauritron.co.uk
TEL: 01844 - 351694
FAX: 01844 - 352554

SUPPLY PANEL

LM311		5322 209 85503

BC327		4822 130 40854
BC337		4822 130 40855
BC547		4822 130 44257
BC547C		4822 130 44503
BC548		4822 130 40938
BC548C		4822 130 44196
BC557		4822 130 44256
BC557B		4822 130 44568
BC558		4822 130 40941
BD235		4822 130 40918
BD236		4822 130 41026
BD675		5322 130 44604

BAW62		4822 130 30613
BYX55/350		4822 130 30817
BZV38		4822 130 30947
BZX75/C2V1		4822 130 34049
BZX79/C6V2		4822 130 34167
BZX79/C8V2		4822 130 34382
BZX79/C10		4822 130 34297
BZX79/C18		4822 130 31024
C2206-B40/C3700		5322 130 34962
1105	Multiplier	4822 214 50231

5001	+12 V	4822 158 20372
5002	Motor drive	4822 158 20371
5003	High tension	4822 142 60318

1101,1102	3.15 AT	4822 253 30027

3115	220 Ω	4822 100 10019
3203	1 kΩ	4822 100 10255
3408	100 kΩ	4822 100 10052

3122	1.5 Ω SR37	4822 111 30461
3217	220 Ω NFR25	4822 111 30544
3333	56 Ω SR37	4822 111 30029

3403	2.2 MΩ VR25	4822 110 72196

MR25 1 %

	127 Ω	5322 116 54479
	316 Ω	5322 116 54511
	332 Ω	4822 116 51226
	619 Ω	4822 116 51232
	1 kΩ	5322 116 54549
	1.5 kΩ	4822 116 51239
	1.96 kΩ	5322 116 54571
	3.65 kΩ	5322 116 54587
	9.53 kΩ	5322 116 54617

2101,2102, 2103,2104	2200 μF - 25 V	4822 124 20788
2105	68 μF - 6.3 V	4822 124 20671
2112	220 μF - 16 V	4822 124 20693
2115	68 μF - 16 V	4822 124 20689
2205	47 μF - 40 V	4822 124 20713
2305	10 μF - 25 V	4822 124 20697
2309	0.68 μF - 25 V	5322 124 14039
2310	10 μF - 40 V	4822 124 20708
2404,2406	0.47 μF - 63 V	4822 124 20719

2110,2111	1.2 nF - 63 V	4822 121 50439
2202	820 pF - 250 V	5322 121 54072
2308	1.5 nF - 63 V	4822 121 50432

	47 pF - 2 %	4822 122 31072
	4.7 nF - 10 %	4822 122 30128
	10 nF −20+50 %	5322 122 34041
	22 nF −20+80 %	4822 122 30103

	1 nF - 10 %	4822 121 41178
	1.5 nF - 10 %	4822 121 41381
	3.9 nF - 10 %	4822 121 41382
	4.7 nF - 10 %	4822 121 40239
	6.8 nF - 10 %	5322 121 44249
	10 nF - 10 %	4822 121 41134
	18 nF - 10 %	4822 121 40314
	100 nF - 10 %	4822 121 41161
	120 nF - 10 %	4822 121 40419
	150 nF - 10 %	4822 121 40423
	180 nF - 10 %	4822 121 41379
	330 nF - 10 %	4822 121 40434

FOR SERVICE MANUALS
CONTACT:
MAURITRON TECHNICAL SERVICES
www.mauritron.co.uk
TEL: 01844 - 351694
FAX: 01844 - 352554

STANDARD COMPONENTS IN THE CIRCUIT UNITS

MR25 1 %

1.1 Ω	4822 116 51356
8.87 Ω	5322 116 54101
47.5 Ω	4822 116 51355
261 Ω	5322 116 54502
301 Ω	5322 116 55366
475 Ω	5322 116 54007
910 Ω	5322 116 55278
1 kΩ	5322 116 54549
1.15 kΩ	5233 116 50415
2 kΩ	5322 116 54572
2.2 kΩ	4822 116 51245
2.15 kΩ	5322 116 50767
2.61 kΩ	5322 116 50671
2.7 kΩ	4822 116 51283
3.65 kΩ	5322 116 54587
3.9 kΩ	4822 116 51249
4.02 kΩ	5322 116 55448
4.7 kΩ	5322 116 54008
4.75 kΩ	5322 116 54008
5.11 kΩ	4822 116 51118
7.5 kΩ	5322 116 55324
8.66 kΩ	5322 116 54613
9.53 kΩ	5322 116 54617
10 kΩ	4822 116 51253
11 kΩ	5322 116 54623
12.4 kΩ	5322 116 54626
15 kΩ	4822 116 51255
16 kΩ	5322 116 50593
16.9 kΩ	5322 116 54635
22 kΩ	4822 116 51257
22.1 kΩ	4822 116 51257
26.1 kΩ	5322 116 54651
33.2 kΩ	5322 116 50482
36 kΩ	5322 116 54662
38.3 kΩ	5322 116 50483
44.2 kΩ	5322 116 55449
48.7 kΩ	5322 116 50442
51.1 kΩ	5322 116 50672
56.2 kΩ	4822 116 51264
68.1 kΩ	4822 116 51266
90.9 kΩ	5322 116 54694

10 nF - 10 %	4822 121 41134
15 nF - 10 %	4822 121 40406
22 nF - 10 %	4822 121 40407
27 nF - 10 %	4822 121 40408
33 nF - 10 %	4822 121 40411
47 nF - 10 %	4822 121 40239
100 nF - 10 %	4822 121 41161
150 nF - 10 %	4822 121 40423
180 nF - 10 %	4822 121 41379
220 nF - 10 %	4822 121 40427
270 nF - 10 %	4822 121 40431
470 nF - 10 %	4822 121 40438

1 pF	4822 122 30104
2.7 pF	4822 122 31187
3.3 pF	4822 122 31188
5.6 pF	4822 122 31191
6.8 pF	4822 122 31192
10 pF - 2 %	4822 122 31054
12 pF - 2 %	4822 122 31056
15 pF - 2 %	4822 122 31058
22 pF - 2 %	4822 122 31063
27 pF - 2 %	4822 122 30045
33 pF - 2 %	4822 122 31067
39 pF - 2 %	4822 122 31069
47 pF - 2 %	4822 122 31072
56 pF - 2 %	4822 122 31074
68 pF - 2 %	4822 122 31334
82 pF - 2 %	4822 122 31318
100 pF - 2 %	4822 122 31316
100 pF - 2 %	4822 122 31081
100 pF - 2 %	4822 122 31504
120 pF - 2 %	4822 122 31306
120 pF - 2 %	4822 122 31348
150 pF - 2 %	4822 122 31085
150 pF - 2 %	4822 122 31511
180 pF - 2 %	4822 122 31352
180 pF - 2 %	4822 122 31507
220 pF - 2 %	4822 122 31222
220 pF - 2 %	4822 122 31173
270 pF - 2 %	4822 122 30107
330 pF - 2 %	4822 122 31353
390 pF - 2 %	4822 122 31426
470 pF - 2 %	5322 122 34159
560 pF - 2 %	4822 122 31425
680 pF - 10 %	4822 122 31178
820 pF - 10 %	4822 122 30031
1 nF - 10 %	4822 122 31175
1.2 nF - 10 %	4822 122 31171
1.5 nF - 10 %	4822 122 31221
2.2 nF - 10 %	4822 122 30114
2.7 nF - 10 %	4822 122 31174
4.7 nF - 10 %	4822 122 30128
4.7 nF −20+80 %	4822 122 31125
10 nF −20+50 %	5322 122 34041
10 nF −20+80 %	4822 122 30043
22 nF −20+80 %	4822 122 30103

FOR SERVICE MANUALS
CONTACT:
MAURITRON TECHNICAL SERVICES
www.mauritron.co.uk
TEL: 01844 - 351694
FAX: 01844 - 352554

Remarks

1. For components of the circuits units see also part 1a of the Service Manual.
2. For codenumbers of service standard components see also Service-catalogue.